GAS-FIRED COMMERCIAL WATER HEATER

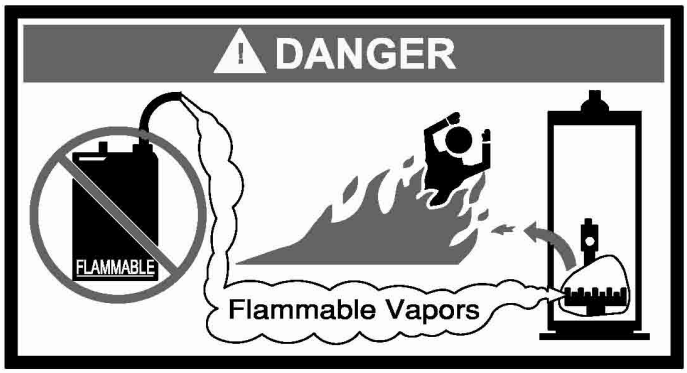

WARNING: If the information in these instructions is not followed exactly, a fire or explosion may result causing property damage, personal injury or death.

- Do not store or use gasoline or other flammable vapors and liquids in the vicinity of this or any other appliance.

- **WHAT TO DO IF YOU SMELL GAS**
  - Do not try to light any appliance.
  - Do not touch any electrical switch; do not use any phone in your building.
  - Immediately call your gas supplier from a neighbor's phone. Follow the gas supplier's instructions.
  - If you cannot reach your gas supplier, call the fire department.

- For your family's comfort, safety and convenience, it is recommended this water heater be installed and serviced by a plumbing professional.

INSTALLATION/OPERATION MANUAL

WITH TROUBLESHOOTING GUIDE

PLACE THESE INSTRUCTIONS ADJACENT TO WATER HEATER AND NOTIFY OWNER TO KEEP FOR FUTURE REFERENCE

238-47675-00B 6/12

SECTION I: IMPORTANT INFORMATION

READ CAREFULLY

This gas-fired water heater is design certified by CSA International under the American National Standard, Z21.10.3 and CAN/CGA 4.3-M (as indicated on the rating plate). These standards are available from CSA Standards Association, 5060 Spectrum Way Mississauga, Ontario L4W 5N6 CANADA.
This water heater must be installed in accordance with local codes. In the absence of local codes, it must be installed in compliance with the National Fuel Gas Code (ANSI Z223.1-Latest Edition), or in Canada CAN/CGA B149.1 Natural Gas Installation Code (Latest Edition) or CAN/CGA B149.2 Propane Installation Code (Latest Edition).

The following terms are used throughout this manual to bring attention to the presence of hazards at various risk levels, or to important information concerning product life.

⚠ DANGER

Indicates an imminently hazardous situation, which, if not avoided, will result in death, serious injury or substantial property damage.

⚠ CAUTION

Indicates potentially hazardous situation, which, if not avoided, may result in moderate or minor injury or property damage.

⚠ WARNING

Indicates a potentially hazardous situation, which, if not avoided, could result in death, serious injury or substantial property damage.

NOTICE

Indicates special instructions on installation, operation or maintenance, which are important but not related to personal injury hazards.

NOTICE

This water heater has a limited warranty. The warranty for this water heater is valid only if the water heater has been installed, maintained and operated in accordance with these instructions. The warranty does not cover damage or injury caused by the use of any energy-saving devices (other than those authorized by the manufacturer) in conjunction with this water heater. The use of unauthorized energy-saving devices may decrease the life of the water heater and endanger life and/or property. The manufacturer will not be liable for any damage, injury, or loss of life resulting from alteration and/or failure to comply with these instructions.

IMPORTANT-Before proceeding, please inspect the water heater and components for possible damage. **DO NOT** install damaged components. If damage is evident, please contact the supplier where the water heater was purchased or the manufacturer listed on the rating plate for replacement parts.

TABLE OF CONTENTS

I IMPORTANT INFORMATION.....2
II SPECIFICATIONS.....5
III GENERAL INFORMATION.....8
IV INSTALLATION INSTRUCTIONS.....10
V VENTING.....15
VI WATER CONNECTIONS……..17
VII GAS CONNECTIONS.....19
VIII ELECTRICAL CONNECTIONS.....21
IX OPERATING INSTRUCTIONS.....23
X MAINTENANCE.....32
XI DIAGNOSTIC AND TROUBLESHOOTING GUIDE.....34
XII PARTS LIST.....54
XIII INSTALLATION FOR POTABLE WATER AND SPACE HEATING.....55
XIV NOTES…….56

⚠ DANGER

DO NOT store or use gasoline or other flammable, combustible, or corrosive vapors and/or liquids in the vicinity of this or any other appliance.

This water heater is equipped with an adjustable thermostat to control water temperature. Hot water temperatures required for automatic dishwasher and laundry use can cause scald burns resulting in serious personal injury and/or death. The temperature at which injury occurs varies with the person's age and the time of exposure. The slower response time of disabled persons increases the hazards to them. ***NEVER*** allow small children to use a hot water tap, or to draw their own bath water. ***NEVER*** leave a child or disabled person unattended in a bathtub or shower.

Toxic chemical, such as those used for boiler treatment, **must not** be introduced into potable water used for space heating.

This water heater **must not** be connected to an existing heating system or component(s) previously used with a non-potable water heating appliance.

All piping components connected to this water heater for space heating applications must be suitable for use with potable water.

⚠ WARNING

Improper installation, adjustments, alteration, service or maintenance can cause property damage, personal injury or loss of life. Failure to follow all instructions in the proper order can cause personal injury or death. Read and understand all instructions, including all those provided with the appliance before installing, starting-up, operating, maintaining or servicing this appliance. Keep this manual and literature in legible condition with this water heater for reference by owner and service technician.

This water heater requires regular maintenance and service to operate safely. Follow the instructions contained in this manual.

Installation, maintenance, and service must be performed only by a qualified, skilled and knowledgeable installer or service provider.

Installation is not complete unless a temperature and pressure relief valve is installed into the proper location at the top of this water heater.

It is the responsibility of the installing contractor to see that all controls are correctly installed and are properly operating when the installation is complete.

DO NOT operate this water heater without first being certain it is filled with water.

DO NOT tamper with or alter the water heater and/or controls.

DO NOT operate water heater with jumpered or absent controls or safety devices.

DO NOT operate water heater if any external part has been under water. Immediately call a qualified service technician to inspect the appliance and to replace any part of the control system including gas controls, which has been under water.

DO NOT attempt to use this water heater with any gas other than the type listed on the rating plate. Do not attempt to convert this water heater for use with a gas other than the type for which it is equipped. Failure to use the proper gas can create an unsafe condition resulting in property damage, bodily injury, or death. Consult your local gas supplier or gas company if there are any questions.

For installations in high altitude regions, this water heater must be ordered from the supplier to the manufacturer's specifications for that particular altitude. Contact the company listed on the rating plate when ordering high altitude constructed water heaters.

Incorrect operation of this appliance may create a hazard to life and property and will nullify the warranty.

DO NOT operate this water heater if the input rate exceeds the rate shown on the water heater rating plate.

This water heater contains very hot water under high pressure. Do not unscrew any pipe fittings nor attempt to disconnect any components of this water heater without positively assuring the water is cool and is not under pressure. Always wear protective clothing and equipment when installing, starting up or servicing this water heater to prevent scald injuries. Do not rely on the temperature gauges to determine the temperature. Do not touch any components unless they are cool.

This water heater must be properly vented and connected to an approved vent system in good condition. **DO NOT** operate water heater with the absence of an approved vent system. A clean and unobstructed vent system is necessary to allow noxious fumes that could cause injury or loss of life to vent safely and will contribute toward maintaining the water heater's efficiency.

⚠ WARNING

This water heater needs fresh air for safe operation and must be installed so there are provisions for adequate combustion and ventilation air. Insufficient air supply will cause a recirculation of combustion products resulting in contamination that may be hazardous to life. This will result in carboning or sooting of the combustion chamber, burners, and flue tubes and creates a risk of asphyxiation.

Water heater materials of construction, products of combustion and the fuel contain carbon monoxide, nitrogen oxides, aldehydes and/or other toxic or harmful substances which can cause death or serious injury and which are known to the state of California to cause cancer, birth defects and other reproductive harm. Always use proper safety clothing, respirators and equipment when servicing or working nearby this water heater.

Flammable items, pressurized containers or any other potential fire hazardous articles must never be placed on or adjacent to the water heater. Open containers of flammable material should not be stored or used in the same room with this water heater.

Insulation blankets are not required for this water heater. This water heater meets or exceeds the ASHRAE/IES 90.1b (latest edition) standards with respect to insulation and standby loss requirements.

Setting the water temperature to the maximum set point can result in scalding hot water delivered to the faucets. It is highly recommended that the maximum setpoint be adjusted to the lowest temperature possible for the needs of the installation. See following section in this Installation/Operation Manual to change the maximum setpoint limit (max setpoint). Make sure the water heater control display is not in a public area that can result in the temperature settings being improperly adjusted.

Hydrogen gas can be produced in an operating water heater that has not had water drawn from the tank for a long period of time (generally two weeks or more). Hydrogen gas is extremely flammable. To prevent the possibility of injury under these conditions, we recommend the hot water faucet to be open for several minutes at the kitchen sink before you use any electrical appliance, which is connect to the hot water system. If hydrogen is present, there will be unusual sounds such as air escaping through the pipes as hot water begins to flow. Do not smoke or have open flame near the faucet at the time it is open.

⚠ WARNING

Liquefied petroleum gases/propane gas is heavier than air and will remain at floor level if there is a leak. Basements, crawl spaces, closets and areas below ground level will serve as pockets for accumulation of leaking gas. Before lighting, smell all around the appliance area for gas. Be sure to smell next to the floor.

IF YOU SMELL GAS:

- **DO NOT** try to light any appliance.
- **DO NOT** touch any electric switch; do not use any telephone in your building.
- Immediately call your gas supplier from a telephone in another building. Follow the gas supplier's instructions.
- If you cannot reach your gas supplier, call the fire department.

DO NOT OPERATE THE APPLIANCE UNTIL THE LEAKAGE IS CORRECTED!

To comply with NSF requirements this water heater is to be:

a) Sealed to the floor with sealant, in a smooth and easily cleanable way, or
b) Installed with an optional leg kit that includes legs and/or extensions that provide a minimum clearance of 6" beneath the water heater.

SECTION II: SPECIFICATIONS

Non-Flue Damper Models and Flue Damper Models (Figure 1)

Model Description			A (in)	B (in)	C (in)	D (in)	E (in)	F (in)
Capacity (GAL)	Input (BTU/hr) Nat.	Input (BTU/hr) LP						
100	199,999	199,999	75.00	64.75	56.50	4.63	23	6
100	250,000	250,000	75.00	64.75	56.50	4.63	23	6
100	270,000	N/A	75.00	64.75	56.50	4.63	23	6
100	300,000	300,000	75.44	64.75	56.50	4.63	23	7
80	399,999	375,000	71.50	60.25	51.50	10.25	N/A	8
80	450,000	425,000	69.00	60.25	51.50	10.25	N/A	10
80	505,000	475,000	69.00	60.25	51.50	10.25	N/A	10

Model Description			A (cm)	B (cm)	C (cm)	D (cm)	E (cm)	F (cm)
Capacity (Litres)	Input (kW/hr) Nat.	Input (kW/hr) LP						
378.5	58.6	58.6	191	164	144	11.8	58.4	15.2
378.5	73.2	73.2	191	164	144	11.8	58.4	15.2
378.5	79.1	N/A	191	164	144	11.8	58.4	15.2
378.5	87.9	87.9	192	166	144	11.8	58.4	17.8
302.8	117.2	109.9	181	153	131	26.0	N/A	20.3
302.8	131.8	124.5	175	153	131	26.0	N/A	25.4
302.8	148.0	139.2	175	153	131	26.0	N/A	25.4

1. N/A - Denotes not available.

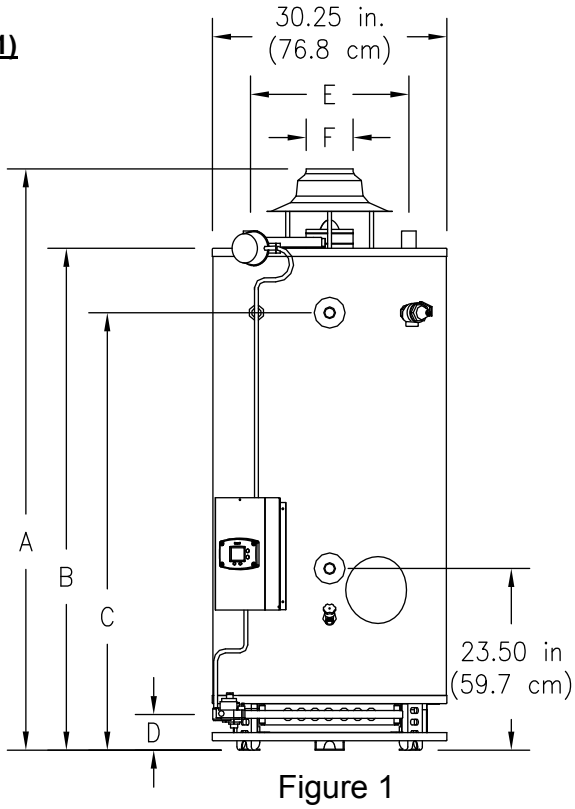

Figure 1

Non-Flue Damper Models (Figure 2)

Model Description		A (in.)	B (in.)	C (in.)	D (in.)
Capacity (GAL)	Input (BTU/hr)				
65	370,000	71.38	64.75	54.13	8
65	399,999 (NAT ONLY)	71.38	64.75	54.13	8
75	300,000	72.00	65.75	54.13	7
80	425,000	81.00	75.50	64.50	10
80	505,000	81.00	75.50	64.50	10

Model Description		A (cm)	B (cm)	C (cm)	D (cm)
Capacity (Litres)	Input (kW/hr)				
246.1	108.4	181	164	137	20.3
246.1	117.2 (NAT ONLY)	181	164	137	20.3
283.9	87.9	183	167	137	17.8
302.8	124.5	206	192	164	25.4
302.8	148.0	206	192	164	25.4

Flue Damper Models (Figure 2)

Model Description		A (in.)	B (in.)	C (in.)	D (in.)
Capacity (GAL)	Input (BTU/hr)				
65	370,000	73.25	64.75	54.50	8
65	399,999 (NAT ONLY)	73.25	64.75	54.50	8
75	300,000	75.88	65.75	54.13	7
80	425,000	82.75	75.50	64.50	10
80	505,000	82.75	75.50	64.50	10

Model Description		A (cm)	B (cm)	C (cm)	D (cm)
Capacity (Litres)	Input (kW/hr)				
246.1	108.4	186	165	138	20.3
246.1	117.2 (NAT ONLY)	186	165	138	20.3
283.9	87.9	193	167	138	17.8
302.8	124.5	210	192	164	25.4
302.8	148.0	210	192	164	25.4

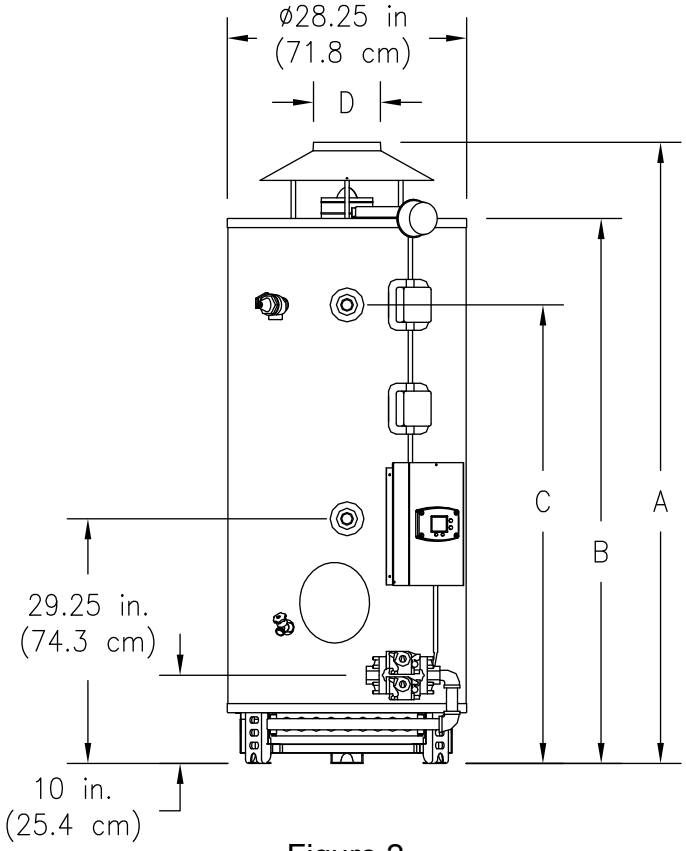

Figure 2

Flue Damper Models and Non-Flue Damper Models (Figure 3)

Model Description		A (in.)	B (in.)	C (in.)	D (in.)	E (in.)
Capacity (GAL)	Input (BTU/hr)					
38	155,000	51.00	43.50	35.00	33.75	6

Model Description		A (cm)	B (cm)	C (cm)	D (cm)	E (cm)
Capacity (Litres)	Input (kW/hr)					
143.9	45.4	130	110	89	86	15.2

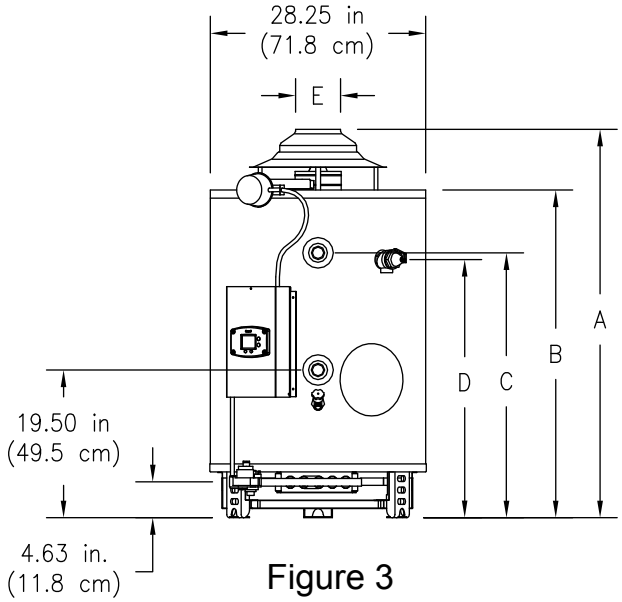

Figure 3

Non-Flue Damper Models (Figure 4)

Model Description		A (in.)	B (in.)	C (in.)	D (in.)	E (in.)	F (in.)
Cap. (GAL)	Input (BTU/hr)						
80	180,000	70.13	66.25	64.50	56.00	19.50	55.13
80	199,999	70.13	66.25	64.50	56.00	19.50	55.13
80	250,000 (235,000 LP)	70.13	66.25	64.50	56.00	19.50	55.13
98	199,999	81.13	77.25	75.50	67.00	19.50	66.13
98	250,000 (235,000 LP)	82.88	77.25	75.50	67.00	19.50	66.13
100	199,999	75.50	69.88	61.88	60.38	20.75	56.88
100	250,000	75.50	69.88	61.88	60.38	20.75	56.88

Model Description		A (cm)	B (cm)	C (cm)	D (cm)	E (cm)	F (cm)
Cap. (Liters)	Input (kW/hr)						
302.8	52.8	178	169	164	142	49.5	140
302.8	58.7	178	169	164	142	49.5	140
302.8	73.3 (68.9 LP)	178	169	164	142	49.5	140
371.0	58.7	206	196	192	170	49.5	168
371.0	73.3 (68.9 LP)	211	196	192	170	49.5	168
378.5	58.7	192	177	157	153	52.7	144
378.5	73.3	192	177	157	153	52.7	144

Flue Damper Models (Figure 4)

Model Description		A (in.)	B (in.)	C (in.)	D (in.)	E (in.)	F (in.)
Cap. (GAL)	Input (BTU/HR)						
80	180,000	71.88	66.25	64.50	56.00	19.50	55.13
80	199,999	71.88	66.25	64.50	56.00	19.50	55.13
80	250,000 (235,000 LP)	71.88	66.25	64.50	56.00	19.50	55.13
98	199,999	83.38	77.25	75.50	67.00	19.50	66.13
98	250,000 (235,000 LP)	88.38	77.25	75.50	67.00	19.50	66.13
100	199,999	76.75	70.00	67.88	60.38	20.75	56.88
100	250,000	76.75	70.00	67.88	60.38	20.75	56.88

Model Description		A (cm)	B (cm)	C (cm)	D (cm)	E (cm)	F (cm)
Cap. (Liters)	Input (kW/hr)						
302.8	52.8	183	169	164	142	49.5	1.40
302.8	58.7	183	169	164	142	49.5	1.40
302.8	73.3 (68.9 LP)	183	169	164	142	49.5	1.40
371.0	58.7	224	196	192	170	49.5	1.68
371.0	73.3 (68.9 LP)	224	196	192	170	49.5	1.68
378.5	58.7	192	177	157	153	52.7	1.44
378.5	73.3	192	177	157	153	52.7	1.44

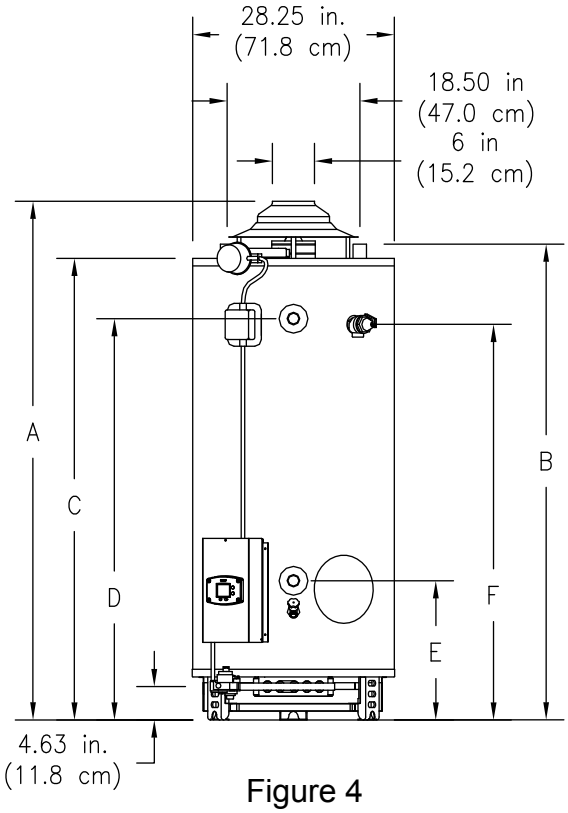

Figure 4

Non-Flue Damper Models (Figure 5)

Model Description		A (in.)	B (in.)	C (in.)	D (in.)	E (in.)
Capacity (GAL)	Input (BTU/hr)					
75	160,000 (155,000 LP)	70.13	67.13	65.00	54.50	6

Model Description		A (cm)	B (cm)	C (cm)	D (cm)	E (cm)
Capacity (Liters)	Input (kW/hr)					
283.9	46.9 (45.4 LP)	178	171	165	138	15.2

Flue Damper Models (Figure 5)

Model Description		A (in.)	B (in.)	C (in.)	D (in.)	E (in.)
Capacity (GAL)	Input (BTU/hr)					
75	125,000	72.25	67.13	65.00	54.50	5
75	160,000 (155,000 LP)	72.25	67.13	65.00	54.50	6

Model Description		A (cm)	B (cm)	C (cm)	D (cm)	E (cm)
Capacity (Liters)	Input (kW/hr)					
283.9	36.6	183	171	165	138	12.7
283.9	46.9 (45.4 LP)	184	171	165	138	15.2

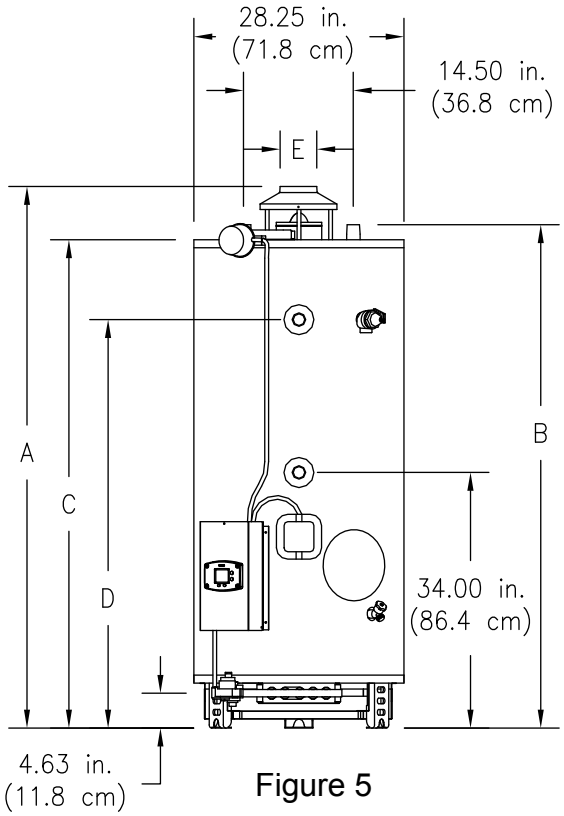

Figure 5

The following notes apply to the tables accompanying Figures 1 - 5.

1. All models with flue dampers and/or above 400,000 BTU per hour input employ a “spark to pilot” (IID) ignition system and requires 120 volt AC electric supply.
2. Model number may have a suffix “N” for natural gas or “X” for liquefied petroleum (LP) gases. Some models may have “A” as a suffix for ASME. Check the rating plate on front of the water heater for model number verification.

SECTION III: GENERAL INFORMATION

FEATURES

1. Porcelain enamel lined tank provides corrosion protection with a tough glass lining on the interior of the tank.
2. Magnesium anodes provide an extra measure of protection and extends tank life.
3. Flue Damper on 24 volt ignition models reduces standby losses on the burner off cycle saving fuel.
4. Hand Hole Cleanout allows inspection of tank interior and allows the removal of lime and sediment deposits.
5. Honeywell Integrated Water Heater Control on 24 volt models having the following features:
   - Attractive digital water heater display on control panel for precisely setting and displaying the temperature setpoint. Pressing temperature up and down buttons changes the temperature setpoint. Temperature format may be displayed in degrees F or degrees C.
   - Single control board with plug in wiring controls temperature, ignition, and flue damper operation.
   - Reduced number of parts for servicing and wiring.
   - Plug in wiring reduces chance of miswiring.
   - Water heater display will show diagnostic codes in the event the water heater needs servicing. Aids in diagnosing and servicing the water heater. Temperature of the tank sensors can be monitored in the Service Mode.
   - Water heater display can show up to 10 previous error codes to further aid in servicing the water heater.

⚠ WARNING

Keep clear of combination temperature and pressure relief valve discharge line outlet. The discharge may be hot enough to cause scald injury. The water is under pressure and may splash.

For protection against excessive temperatures and pressure, install temperature and pressure protective equipment required by local codes, but not less than a combination temperature and pressure relief valve certified by a nationally recognized testing laboratory that maintains periodic inspection of production of listed equipment or materials as meeting the requirements of the Standard for *Relief Valves and Automatic Gas Shutoff Devices for Hot Water Supply Systems, ANS Z21.22* and the Standard *CAN1-4.4 Temperature, Pressure, Temperature and Pressure Relief Valves and Vacuum Relief Valves*. The combination temperature and pressure relief valve must be marked with a maximum set pressure not to exceed the maximum working pressure of the water heater. The combination temperature and pressure relief valve must also have an hourly rated temperature steam BTU discharge capacity not less than the hourly rating of the water heater.

Install the combination temperature and pressure relief valve into the opening provided and marked for this purpose on the water heater.

Note: Some models may already be equipped or supplied with a combination temperature and pressure relief valve. Verify that the combination temperature and pressure relief valve complies with local codes. If the combination temperature and pressure relief valve does not comply with local codes, replace it with one that does. Follow the installation instructions above on this page.

Install a discharge line so that water discharged from the combination temperature and pressure relief valve will exit within six (6) inches *(15.2 cm)* above, or any distance below the structural floor and cannot contact any live electrical part. The discharge line is to be installed to allow for complete drainage of both the combination temperature and pressure relief valve and the discharge line. The discharge opening must not be subjected to blockage or freezing. **DO NOT** thread, plug or cap the discharge line. It is recommended that a minimum clearance of four (4) inches *(10.2 cm)* be provided on the side of the water heater for servicing and maintenance of the combination temperature and pressure relief valve.

Do not place a valve between the combination temperature and pressure relief valve and the tank.

DISHWASHING MACHINE REQUIREMENTS

All dishwashing machines meeting the National Sanitation Foundation requirements are designed to operate with water flow pressures between 15 and 25 pounds per square inch. Flow pressures above 25 pounds per square inch, or below 15 pounds per square inch, will result in improperly sanitized dishes.

The National Sanitation Foundation also recommends circulation of 180°F water. Where this is done, the circulation should be very gentle so that it does not cause any unnecessary turbulence inside the water heater. The circulation should be just enough to provide 180°F water at the point of take-off to the dishwashing machine. Adjust flow by means of the valve in the circulation line.

SECTION IV: INSTALLATION INSTRUCTIONS

⚠ WARNING

INSTALLATION OF THIS WATER HEATER REQUIRES ABILITY EQUIVALENT TO THAT OF A LICENSED TRADESMAN IN THE FIELD INVOLVED. PLUMBING, AIR SUPPLY, VENTING, GAS SUPPLY AND ELECTRICAL WORK ARE REQUIRED.

DO NOT ATTEMPT TO LIGHT ANY GAS APPLIANCE IF YOU ARE NOT CERTAIN OF THE FOLLOWING:

- Liquefied petroleum gases/propane gas and natural gas have an odorant added by the gas supplier that aids in detection of the gas.
- Most people recognize this odor as a “sulfur” or “rotten egg” smell.
- Other conditions, such as “odorant fade” can cause the odorant to diminish in intensity, or “fade”, and not be as readily detectable.
- If you have a diminished sense of smell, or are in any way unsure of the presence of gas, immediately contact your gas supplier from a telephone in another building.
- Gas detectors are available. Contact your gas supplier or plumbing professional for more information.

Liquefied petroleum gases/propane gas is heavier than air and will remain at floor level if there is a leak. Basements, crawl spaces, closets and areas below ground level will serve as pockets for accumulation of leaking gas. Before lighting, smell all around the appliance area for gas. Be sure to smell next to the floor.

IF YOU SMELL GAS:

- Do not try to light any appliance.
- Do not touch any electric switch; do not use any telephone in your building.
- Immediately call your gas supplier from a telephone in another building. Follow the gas supplier’s instructions.
- If you cannot reach your gas supplier, call the fire department.

DO NOT OPERATE THE APPLIANCE UNTIL THE LEAKAGE IS CORRECTED!

This water heater must be located in an area where leakage of the tank, water line connections, or the combination temperature and pressure relief valve will not result in damage to the area adjacent to the water heater or to lower floors of the structure. When such locations cannot be avoided, a suitable drain pan must be installed under the water heater. The drain pan depth must be suitable for draining and collecting water, and have a minimum length and width of at least four (4) inches (10.0 cm) measured from the jacket of the water heater. The drain pan, as described above, can be purchased from your plumbing professional. The drain pan must be piped to an adequate drain. The piping must be at least ¾ inch (2.0 cm) in diameter and pitched for proper drainage.

Water heaters are heat producing appliances. To avoid damage or injury there must be no materials stored against the water heater and proper care must be taken to avoid unnecessary contact (especially by children) with the water heater components. **UNDER NO CIRCUMSTANCES SHALL FLAMMABLE MATERIALS, SUCH AS GASOLINE OR PAINT THINNER BE USED OR STORED IN THE VICINITY OF THIS WATER HEATER, VENT-AIR INTAKE SYSTEM OR IN ANY LOCATION FROM WHICH FUMES COULD REACH THE WATER HEATER OR VENT-AIR INTAKE SYSTEM.**

Failure to adhere to these installation and operating instructions may create a hazard to life and property and will nullify the warranty.

Minimum Clearances

⚠ CAUTION

The National Fuel Gas Code (ANSI Z233.1- latest edition) or in Canada The Natural Gas or Propane Installation Code CAN/CGA (B149.1, B149.2- latest edition), expressly prohibits the following:

a. Installation of a water heater in a bathroom, bedroom, or any occupied room normally kept closed.
b. Installation of a water heater in a garage, unless the unit is installed so that the burner and ignition devices are at least eighteen (18) inches (*45.8 cm*) above floor level and protected to avoid damage by a moving vehicle.

If the buildings cold water supply has a back-flow preventer, check valve or water meter with check valve, provisions for thermal expansion of water in the hot water system must be provided.

The location of this water heater is of the utmost importance. Before installing this water heater, you should read the Installation section of these instructions. After reading these Installation and Operating Instructions, select a location for the water heater where the floor is level and is easily accessible to water lines, gas supply (type identified on the rating plate), an adequate open drain, and a chimney or exhaust gas vent. **DO NOT locate the water heater where water lines could be subjected to freezing temperatures**. **Make sure the cold water pipes are not located directly above the gas control box or any other electrical control so that condensate during humid weather does not drip on the controls**.

⚠ WARNING

IF COMBUSTIBLE FLOORING IS USED, A THERMAL BREAK LEG KIT MUST BE INSTALLED BEFORE SETTING WATER HEATER IN PLACE. THE APPROPRIATE LEG KIT HAS BEEN INCLUDED WITH THIS WATER HEATER.

This installation must allow access to the front of the water heater and adequate clearance must be provided for servicing and operating this water heater. The water heater may be installed on either a combustible or non-combustible floor. If the water heater is to be installed directly on carpeting, it must be installed on top of a metal or wood panel (or equivalent) extending beyond the full width and depth of the appliance by at least three (3) inches (*7.6 cm)* in any direction or, if the appliance is to be installed in an alcove or closet, the entire floor must be covered by the panel. The minimum clearances to combustibles for this water heater are given on the following pages. A minimum of 24 inches front clearance must be provided for inspection and servicing. Adequate clearances must be provided for easy access to controls by service personnel to enable proper cleaning, servicing, and operation of the water heater. Under no circumstances is the front of the water heater to be placed in a position where the burner tray assembly cannot slide out for removal when servicing.

This water heater MUST be installed indoors out of the wind and weather.

Note: For California installation this water heater must be braced, anchored, or strapped to avoid falling or moving during an earthquake. See instructions for correct installation procedures. Instructions may be obtained from DSA Headquarters Office, 1102 Q Street, Suite 5100, Sacramento, California 95811.

Water heater corrosion and component failure can be caused by the heating and breakdown of airborne chemical vapors. Examples of some typical compounds that are potentially corrosive are: spray can propellants, cleaning solvents, refrigerator and air conditioning refrigerants, swimming pool chemicals, calcium and sodium chloride, waxes and process chemicals. These materials are corrosive at very low concentration levels with little or no odor to reveal their presence.

NOTICE

DAMAGE TO THE WATER HEATER CAUSED BY EXPOSURE TO CORROSIVE VAPORS IS NOT COVERED BY THE WARRANTY. DO NOT OPERATE THE WATER HEATER IF EXPOSURE HAS OR WILL OCCUR. DO NOT STORE ANY POTENTIALLY CORROSIVE COMPOUNDS IN THE VICINITY OF THE WATER HEATER.

UNPACKING

INSPECT SHIPMENT carefully for any signs of damage.

1. All equipment is carefully manufactured, inspected and packed.
2. Any claims for damage or shortage in shipment must be filed immediately with the manufacturer noted on the rating plate label.

LOCATE WATER HEATER in front of final position before removing crate.

1. LOCATE so that venting connections will be short and direct.
2. THIS WATER HEATER IS SUITABLE FOR INSTALLATION ON COMBUSTIBLE FLOOR. The thermal break leg kit supplied with the water heater must be used.
3. Proper venting practices must be considered when selecting a location for this water heater. For exact venting specifications, please consult the Venting section of these Installation and Operating Instructions.
4. It is recommended that a minimum clearance of four (4) inches *(10.2 cm)* be provided on the side of the water heater for servicing and maintenance of the combination temperature and pressure relief valve.
5. Increase distances to provide clearance for servicing.

Input	Front, sides and Rear "A"
Less than or equal to 300,000 BTUH	**2 in. *(5.1 CM)***
Greater than 300,000 BTUH	**6 in *(15.2 CM)***

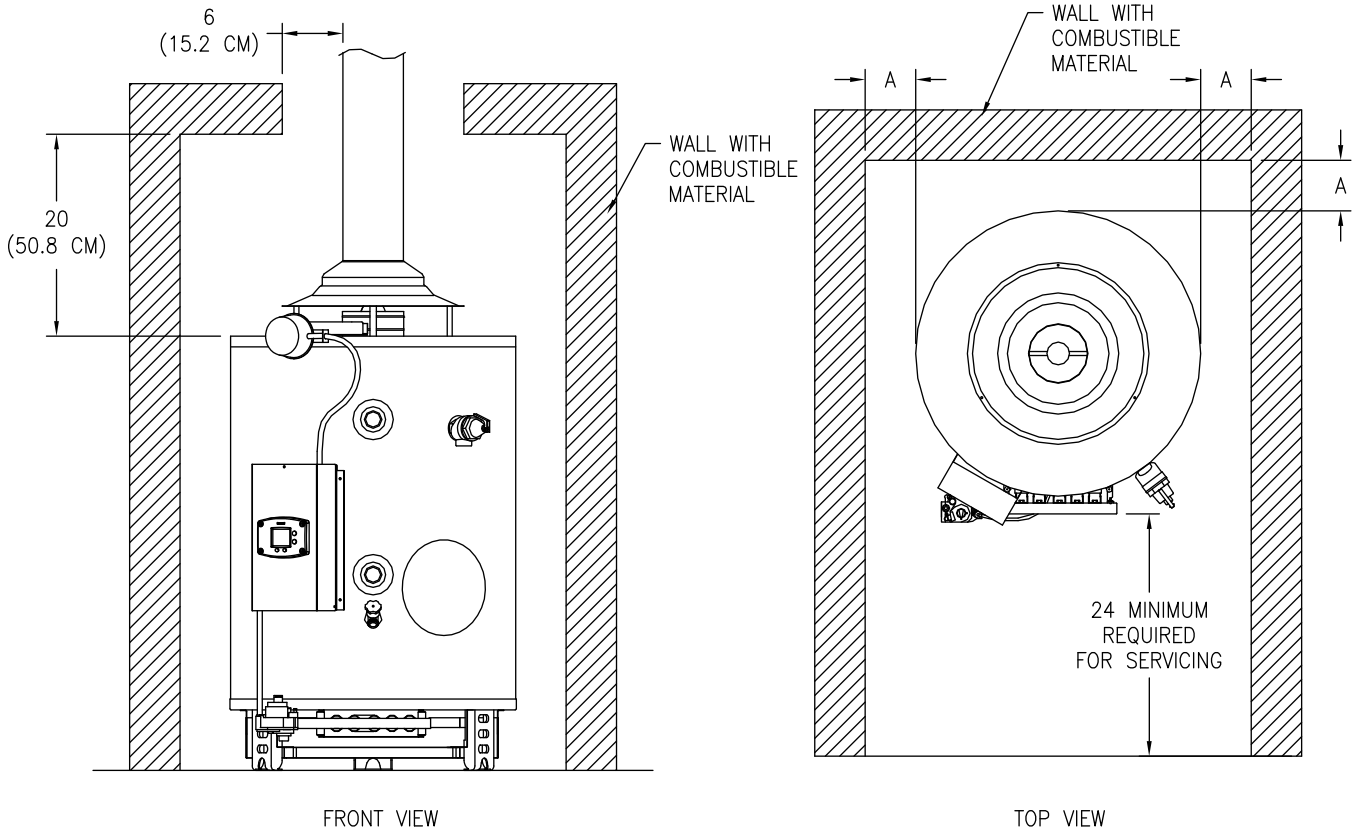

REMOVE CRATE

1. Remove all banding and pry off crate sides carefully so as not to damage the water heater.
2. Carefully roll/lift the water heater from the crate base.

MOVE WATER HEATER TO PERMANENT POSITION by sliding or walking. Place drain pan underneath water heater

INSTALL TEMPERATURE AND PRESSURE RELIEF VALVE (if not already installed).

This water heater must be located in an area where the general public does not have access to set temperatures.

AIR REQUIREMENTS

1. Do not obstruct the flow of ventilating air.

2. For safe operation, adequate air is needed for combustion and ventilation. Sooting may result in serious damage to the water heater and risk of fire or explosion. It can also create a risk of asphyxiation. Such a condition often will result in a yellow, luminous burner flame, causing carboning or sooting of the combustion chamber, burner and flue tubes.

⚠ WARNING

IMPORTANT-The flow of combustion and ventilating air must not be obstructed.

MECHANICAL EXHAUSTING OF ROOM AIR - Where an exhaust fan is installed in the same room with this water heater and combustion air is drawn from inside the room, sufficient openings for air must be provided in the walls. UNDERSIZED OPENINGS WILL CAUSE AIR TO BE DRAWN INTO THE ROOM THROUGH THE WATER HEATER'S VENTING SYSTEM, CAUSING POOR COMBUSTION THAT MAY BE HAZARDOUS TO LIFE. SOOTING MAY RESULT IN SERIOUS DAMAGE TO THE WATER HEATER AND RISK OF FIRE OR EXPLOSION, WHICH CAN ALSO CREATE A RISK OF ASPHYXIATION. Refer to local codes and /or National Fuel Gas Code (ANSI Z223.1-Latest Edition), or in Canada CAN/CGA B149.1 Natural Gas Installation Code (Latest Edition) or CAN/CGA B149.2 Propane Installation Code (Latest Edition) for proper air opening sizing.

CONFINED SPACES

If the water heater is installed in a confined space (volume is less than 50 ft.^{3}/1000 BTU (*15 m^3/0.29 kW*) per hour of the total input rating of all gas appliances in that space), air must be supplied through two permanent openings. One opening must be within 12 inches (*30.5 cm*) from the top of the enclosure and one within 12 inches (*30.5 cm*) of the bottom. The openings must be protected by metal louvers or 1/4" (*6.4 mm*) min. mesh metal screen. The size of the openings are as follows:

⚠ CAUTION

The draft diverter relief opening of the water heater and combustion air inlet must be in the same atmospheric pressure zone. Large exhaust fans in kitchens and other locations can lower the air pressure inside an enclosure and interfere with the proper operation and venting of the water heater. In these cases, the water heater should be installed in a separate room with the combustion and ventilation air supplied directly from outdoors as previously described.

1. If the openings communicate directly with an additional room(s) of sufficient volume, each opening must have a minimum free area opening of 1 in.^{2}/1000 BTU (2.54cm^2/0.29kW) per hour of the total input rating of all gas appliances in the confined space, but not less than 100 in.^{2} (254 cm^2).

2. If the openings communicate with the outdoors through horizontal ducts, each opening must have a minimum free area of 1 in.^{2}/2000 BTU (2.54cm^2/0.59kW) per hour of the total rating of all gas appliances in the enclosure.

3. If the openings communicate directly with the outdoors or through vertical ducts with the outdoors, each opening must have a minimum free area of 1 in.^{2} /4000 BTU (2.54cm^2/1.18kW) per hour of the total rating of all gas appliances in the enclosure.

ALL AIR FROM INSIDE THE BUILDING: The confined space must be provided with two permanent openings communicating directly with an additional room(s) of sufficient volume so that the combined volume of all spaces meets the criteria for an unconfined space. The total input of all gas utilization equipment installed in the combined space must be considered in making this determination. Each opening must have a minimum free area of 1 in.^{2}/1000 BTU (*2.54cm^2/0.29kW*) per hour of the total input rating of all gas utilization equipment in the confined space, but not less than 100 square inches (*254cm^2*). One opening must be within 12 inches (*30.5 cm*) of the top and one within 12 inches (*30.5 cm*) of the bottom of the enclosure.

UNCONFINED SPACES

In unconfined spaces in buildings, infiltration may be adequate to provide air for combustion, ventilation and dilution of flue gases. However, in buildings of tight construction (for example, weather stripping, heavily insulated, caulked, vapor barrier, etc.), additional air may need to be provided using the methods described above under CONFINED SPACES: All Air From Outdoors or SPECIALLY ENGINEERED INSTALLATIONS.

SPECIALLY ENGINEERED INSTALLATIONS

The requirements noted under CONFINED SPACES above must not necessarily govern when special engineering, approved by the authority having jurisdiction, provides an adequate supply of air for combustion, ventilation, and dilution of flue gases.

SECTION V: VENTING

⚠ WARNING

The venting system must be installed properly following all local codes or in the absence of local codes, the latest edition of the National Fuel Gas Code (ANSI Z223.1- latest edition), or in Canada, The Natural Gas and Propane Installation Code (B149.1-00 latest edition). Failure to properly install the venting system could result in property damage, personal injury, or death.

Carefully inspect the venting system of a replacement water heater installation before connecting to the venting system. All joints in the vent connector must be securely fastened with screws and fit tightly together. Inspect the venting system for signs of deterioration (rust and perforation) and replace any sections that are not in good condition.

The chimney must be lined and in good condition. Check to make sure the venting system is properly sized for the water heater. If the venting system was previously sized for another gas appliance that has been removed, the venting system may now be too large. Refer to the latest edition of the National Fuel Gas Code (ANSI Z223.1-latest edition), or in Canada, the Natural Gas and Propane Installation Code (B149.1-00 latest edition) for the correct sizing of venting systems and common venting with another gas appliance. Do not vent this water heater into the venting system of another gas appliance designed to vent under positive pressure.

The water heater should be installed as close as practical to the venting system to minimize the vent connector length required. Refer to local codes for the distance limitations on vent connector lengths. At the completion of the water heater installation, the burner and venting system must be checked for proper operation with all other commonly vented appliances in operation. Check for spillage of flue products around the outside relief opening of the drafthood after several minutes of operation. The flame from a match should be drawn into the drafthood. Do not use the water heater or connected equipment if spillage is detected until the problem is corrected. Refer to the latest edition of the National Fuel Gas Code, or in Canada, the Natural Gas and Propane Installation Code for complete details on the “Procedure to Be Followed to Place Equipment in Operation”.

This water heater has been shipped with a draft diverter for which it was designed with reference to the horizontal and vertical planes. If removed, the draft diverter must be replaced in the same position and secured to the jacket top by the screws with which it was installed.

This water heater must be connected to a lined masonry chimney or venting system approved by local codes or ordinances. The vent connector used to attach the draft diverter outlet to the chimney or approved vent must be of the same diameter as the draft diverter outlet or larger. For proper venting in certain installations, a larger vent connector may be needed. Consult venting tables in ANSI standard (Z223.1- latest edition), National Fuel Gas Code and CAN/CGA (B149.1 or B149.2-latest editions) Natural Gas and Propane Installation Code, or local code officials for proper application for your area.

FLUE DAMPER

Refer to Figure 6 and follow these instructions:

⚠ CAUTION

Do not turn on electrical power to water heater until flue damper is installed and water heater is filled with water.

1. Remove the damper from the accompanying box shipped within the crate.

2. Locate the collector outlet on top of the water heater. Place the damper over the collector outlet and rotate as necessary to a position in which the damper wiring plug can be fully engaged with the connector on the side of the water heater.

3. Secure the flue damper to the jacket top with sheet metal screws.

4. Connect the damper wiring plug to the damper wire harness connector on the side of the water heater. Note: The plug and connector can only be engaged one way (polarized).

5. The Lighting and Operating instructions are outlined in this manual. The damper must be in the open position when the water heater main burner is operating (the arrow on the damper plate is in the “up” position when open. Be certain the arrow is in a visible position when installed).

DRAFT DIVERTER

This water heater has been shipped with a draft diverter for which it was designed. Remove the bag containing the legs and instructions from the draft diverter. Attach the legs to the draft diverter and attach the draft diverter to the water heater per the instructions in the bag.

⚠ CAUTION

Modification to the flue damper or the draft diverter may result in personal injury, property damage or death. The flue damper and draft diverter are to be placed in position and operate exactly as stated in these instructions without modification.

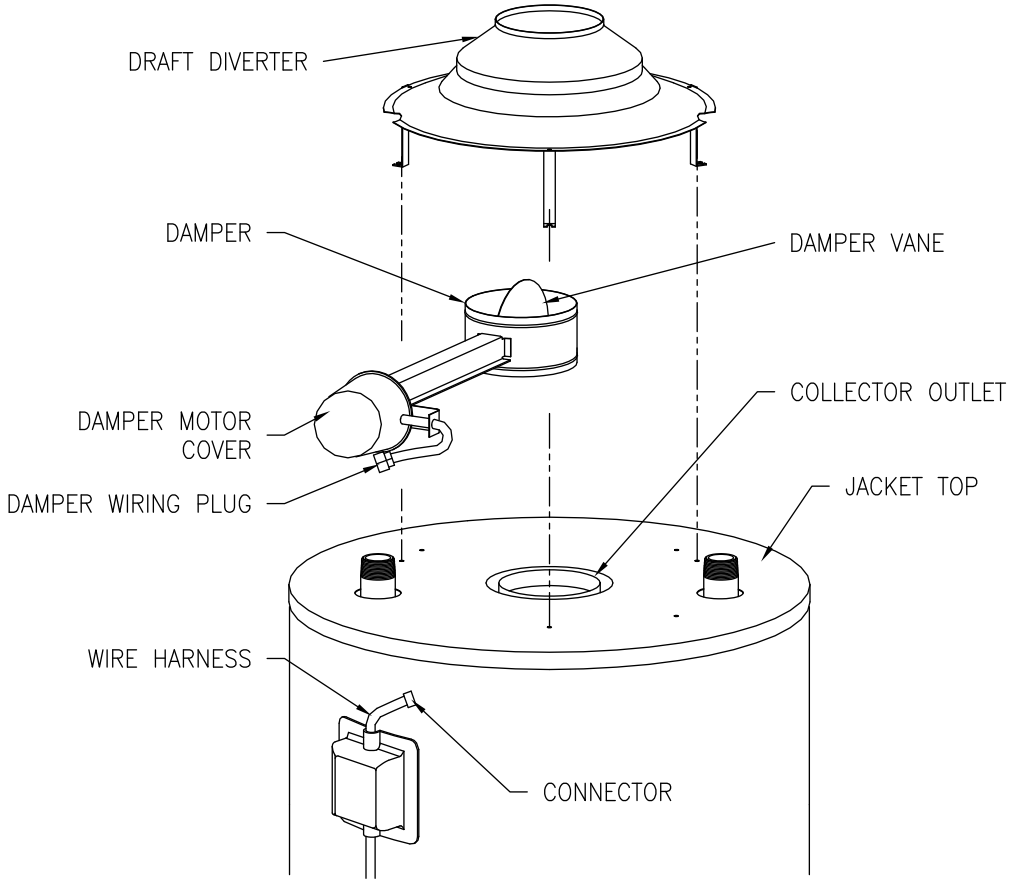

Figure 6

SECTION VI: WATER CONNECTIONS

NOTE: *BEFORE PROCEEDING WITH THE INSTALLATION, CLOSE THE MAIN WATER SUPPLY VALVE.*
After shutting off the main water supply, open a faucet to relieve the water line pressure to prevent any water from leaking out of the pipes while making the water connections to the water heater. After the pressure has been relieved, close the faucet. The COLD water inlet and HOT water outlet are identified on the top and front of the water heater. Make sure the diptube is in place before making the cold water connection. Make the proper plumbing connections between the water heater and the plumbing system to the house. Install a shut-off valve in the cold water supply line.

⚠ CAUTION

If sweat fittings are to be used, **DO NOT** apply heat to the nipples on top or side of the water heater. Sweat the tubing to the adapter before fitting the adapter to the water heater connections. It is imperative that heat is not applied to the nipples containing a plastic liner.

⚠ WARNING

FAILURE TO INSTALL AND MAINTAIN A NEW, LISTED TEMPERATURE AND PRESSURE RELIEF VALVE WILL RELEASE THE MANUFACTURER FROM ANY CLAIM WHICH MIGHT RESULT FROM EXCESSIVE TEMPERATURE AND PRESSURES.

NOTICE

If this water heater is installed in a closed water supply system, such as the one having a back-flow preventer in the cold water supply, provisions must be made to control thermal expansion. **DO NOT** operate this water heater in a closed system without provisions for controlling thermal expansion. Warranties do not cover damages from thermal expansions such as pressure bulges and/or deformities. Your water supplier or local plumbing inspector should be contacted on how to control this situation.

After installation of the water lines, open the main water supply valve and fill the water heater. While the water heater is filling, open several hot water faucets to allow air to escape from the water system. When a steady stream of water flows through the faucets, close them and check all water connections for possible leaks. **NEVER OPERATE THE WATER HEATER WITHOUT FIRST BEING CERTAIN IT IS FILLED WITH WATER.**

APPROXIMATE TIME/TEMPERATURE RELATIONSHIPS IN SCALDS	
120°F *(49°C)*	More than 5 minutes
125°F *(52°C)*	1½ to 2 minutes
130°F *(54°C)*	About 30 seconds
135°F *(57°C)*	About 10 seconds
140°F *(60°C)*	Less than 5 seconds
145°F *(63°C)*	Less than 3 seconds
150°F *(66°C)*	About 1½ seconds
155°F *(68°C)*	About 1 second

⚠ WARNING

Keep clear of combination temperature and pressure relief valve discharge line outlet. The discharge may be hot enough to cause scald injury. The water is under pressure and may splash.

For protection against excessive temperatures and pressure, install temperature and pressure protective equipment required by local codes, but not less than a combination temperature and pressure relief valve certified by a nationally recognized testing laboratory that maintains periodic inspection of production of listed equipment or materials as meeting the requirements of the Standard for *Relief Valves and Automatic Gas Shutoff Devices for Hot Water Supply Systems, ANS Z21.22* and the Standard *CAN1-4.4 Temperature, Pressure, Temperature and Pressure Relief Valves and Vacuum Relief Valves*. The combination temperature and pressure relief valve must be marked with a maximum set pressure not to exceed the maximum working pressure of the water heater. The combination temperature and pressure relief valve must also have an hourly rated temperature steam BTU discharge capacity not less than the hourly rating of the water heater.

Install the combination temperature and pressure relief valve into the opening provided and marked for this purpose on the water heater.

Note: Some models may already be equipped or supplied with a combination temperature and pressure relief valve. Verify that the combination temperature and pressure relief valve complies with local codes. If the combination temperature and pressure relief valve does not comply with local codes, replace it with one that does. Follow the installation instructions above on this page.

Install a discharge line so that water discharged from the combination temperature and pressure relief valve will exit within six (6) inches *(15.2 cm)* above, or any distance below the structural floor and cannot contact any live electrical part. The discharge line is to be installed to allow for complete drainage of both the combination temperature and pressure relief valve and the discharge line. The discharge opening must not be subjected to blockage or freezing. **DO NOT** thread, plug or cap the discharge line. It is recommended that a minimum clearance of four (4) inches *(10.2 cm)* be provided on the side of the water heater for servicing and maintenance of the combination temperature and pressure relief valve.

Do not place a valve between the combination temperature and pressure relief valve and the tank.

Hydrogen gas can be produced in an operating water heater that has not had water drawn from the tank for a long period of time (generally two weeks or more). Hydrogen gas is extremely flammable. To prevent the possibility of injury under these conditions, we recommend the hot water faucet to be open for several minutes at the kitchen sink before you use any electrical appliance which is connected to the hot water system. If hydrogen is present, there will be an unusual sound such as air escaping through the pipes as hot water begins to flow. Do not smoke or have open flame near the faucet at the time it is open.

⚠ DANGER

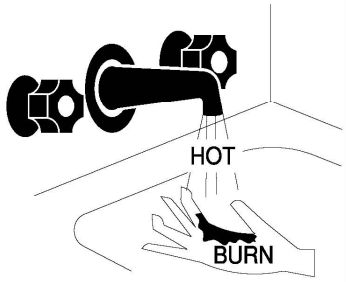

Water temperature over 125°F can cause severe burns instantly or death from scalds.

Children, disabled and elderly are at highest risk of being scalded.

Review this instruction manual before setting temperature at water heater.

Feel water before bathing or showering.

Temperature limiting valves are available.

This water heater can deliver scalding temperature water at any faucet in the system. Be careful whenever using hot water to avoid scalding injury. Certain appliances such as dishwashers and automatic clothes washers may require increased temperature water. By setting the thermostat on this water heater to obtain the increased temperature water required by these appliances, you may create the potential for scald injury. To protect against injury, you should install an ASSE approved mixing valve in the water system. This valve will reduce point of discharge temperature by mixing cold and hot water in branch supply lines. Such valves are available from the manufacturer of this water heater or a local plumbing supplier. Please consult with a plumbing professional. For information regarding space heating water connections and plumbing arrangements, refer to the section at the end of this manual.

SECTION VII: GAS CONNECTIONS

The gas supply lines must meet all requirements of the National Fuel Gas Code (ANSI Z223.1-Latest Edition), or in Canada CAN/CGA B149.1 Natural Gas Installation Code (Latest Edition) or CAN/CGA B149.2 Propane Installation Code (Latest Edition).

The minimum permissible gas supply pressure for the purpose of input adjustment is one (1.0) inch *(0.25 kPa)* water column above the operating manifold pressure. See the rating plate and gas valve for the manifold pressure and gas type. The maximum permissible gas supply pressure is fourteen (14.0) inches *(3.5 kPa)* water column for natural gas and liquefied petroleum gases/propane gas.

1. Connect this water heater only to the type of gas (Natural or Propane gas) as shown on the rating plate. Use clean black iron pipe or equivalent material approved by local codes and ordinances. (Dirt and scale from the pipe can enter the gas valve and cause it to malfunction). The inlet gas line must have a minimum length of three (3) inches *(7.6 cm)* drip leg (sediment trap) installed as close to the water heater's gas valve as possible. A ground joint union must be installed as close to the water heater as possible in the gas supply line feeding the water heater to permit servicing of the water heater. Compounds used on the threaded joints of the gas piping must be resistant to the action of liquefied petroleum gases/propane gas. DO NOT apply pipe dope to the gas valve inlet and make certain that no pipe dope has become lodged in the inlet screen of the gas valve. Extreme care must be taken to ensure no pipe dope enters the gas valve. Avoid excessive torque when tightening the gas supply line to the gas valve. Excessive torque may result in cracking of the gas valve housing and could create a gas leak. The suggested maximum torque is 31.5 ft. lbs. (*4.4 kg-m*).

⚠ WARNING

The manufacturer of this water heater will not be liable for any damage or injury caused as a result of a cracked gas inlet as a result of excessive torque.

2. This water heater and its gas connection must be leak tested before placing the water heater in operation. Check for gas leaks with a soap and water solution and a brush or a commercial leak detector fluid. **NEVER USE A MATCH OR OPEN FLAME FOR TESTING!**

⚠ CAUTION

The water heater and individual shutoff valve must be disconnected from the gas supply piping system during any pressure testing of the system at test pressures in excess of 1/2 psi (*3.5 kPa*). The water heater must be isolated from the gas supply piping system by closing its manual shutoff valve during any pressure testing of the gas supply system at test pressures equal to or less than 1/2 psi (*3.5 kPa*). The supply line must be capped when not connected to the water heater.

3. While checking for leaks care must be taken to prevent solution from contacting the electrical connections at the control. If electrical connections at the control become wet, they must be thoroughly dried before attempting to operate the water heater.

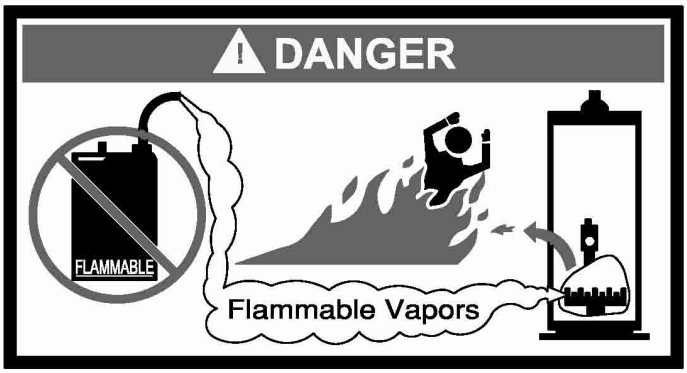

⚠ WARNING

Water heaters are heat-producing appliances. To avoid damage or injury there must be no materials stored against the water heater or direct vent system, and proper care must be taken to avoid unnecessary contact (especially by children) with the water heater and direct vent system. **UNDER NO CIRCUMSTANCES SHOULD FLAMMABLE MATERIALS, SUCH AS GASOLINE OR PAINT THINNER BE USED OR STORED IN THE VICINITY OF THIS WATER HEATER OR IN ANY LOCATION FROM WHICH FUMES COULD REACH THE WATER HEATER.**

Installation or service of this water heater requires ability equivalent to that of a licensed tradesman in the field involved. Plumbing, air supply, venting, gas supply and electrical work are required.

Light the unit in accordance with the operating instructions label attached to the water heater.

Under no circumstances should the input rate exceed the input rate shown on the water heater rating plate. Over firing could result in damage or sooting of the water heater.

If the unit is exposed to the following, do not operate water heater until all corrective steps have been made by a factory authorized independent service contractor or qualified service professional.

1. Flooding to or above the level of the burner or controls
2. External firing
3. Damage
4. Firing without water
5. Sooting

NEVER OPERATE THE WATER HEATER WITHOUT FIRST BEING CERTAIN IT IS FILLED WITH WATER AND A TEMPERATURE AND PRESSURE RELIEF VALVE IS INSTALLED IN THE RELIEF VALVE OPENING OF THE WATER HEATER.

TO FILL THE WATER HEATER

1. Close the water heater drain valve by turning the knob clockwise. If alternative water connections are provided but not used, make certain they are plugged (i.e. rear connections).
2. Open the cold water supply shut-off valve.
3. Open several hot water faucets to allow air to escape from the system.
4. When a steady stream of water flows from the faucets, the water heater is filled. Close the faucets and check for water leaks at the water heater drain valve, combination temperature and pressure relief valve and the hot and cold water connections.
5. To restore operation of water heater refer to operating instruction label on the water heater.

TO DRAIN THE WATER HEATER

Should it become necessary to completely drain the water heater, make sure you follow the steps below:

1. Reduce the thermostat setpoint to the lowest setting. On water heater models having 24 volt controls, depress the control panel rocker switch on the top of the control box to the “OFF” position and disconnect the power to the water heater.
2. Rotate and partially depress gas control knob clockwise to the “OFF” position.
3. Shut off the gas supply to the water heater.
4. Close the cold water supply shut-off valve.
5. Open the drain valve on the water heater by turning the knob counter-clockwise. The drain valve has threads on the end that will allow the connection of a standard hose coupling.
6. Open a hot water faucet to allow air to enter the system.

To refill the water heater, refer to “To Fill the Water Heater.”

SECTION VIII: ELECTRICAL CONNECTIONS

Standing pilot

Standing Pilot Wiring Diagram

Robertshaw Gas Valve **Honeywell Gas Valve**

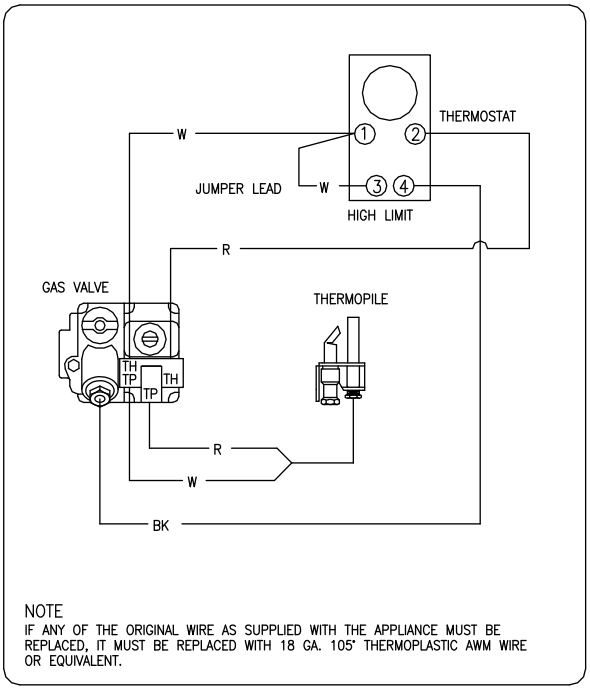

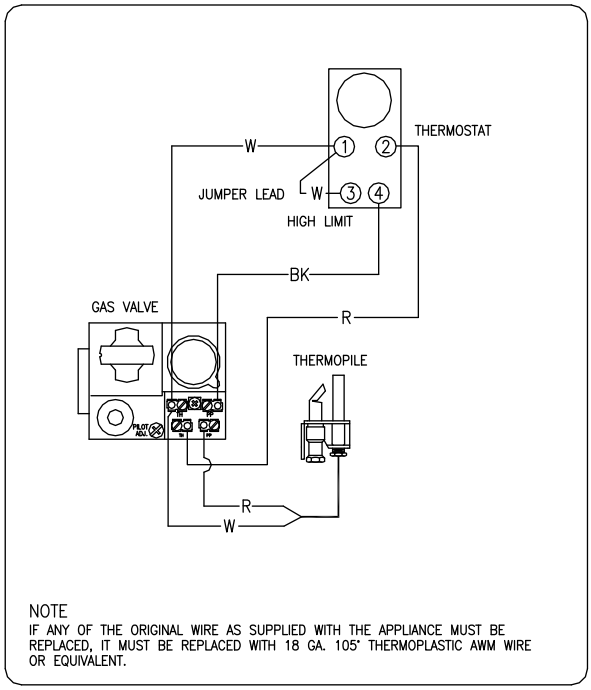

Spark to Pilot (IID) ignition system.

⚠ WARNING

Turn off or disconnect the electrical power supply to the water heater before servicing. Label all wires prior to disconnection when servicing controls. Wiring errors can cause improper and dangerous operation. Verify proper operation after servicing.

All electrical wiring must be installed and grounded in accordance with local codes, or in the absence of local codes, the National Electrical Code, ANSI/NFPA 70 and/or CSA C22.2 Electrical Code. In Canada, follow the latest edition of the Canadian Electrical Code (Part 1, CSA-C22.1) and all applicable local codes.

The water heater must be wired to a 115 volt, 60 Hz, AC power supply. The water heater **must** be wired on a separate circuit and breaker. If a flexible line cord and plug is permitted by local code, then provide a three wire grounding type receptacle within reach of the line cord provided on the control box. Do not plug the line cord into a receptacle that can have the power supply interrupted by a switch that is used to control lights or another appliance.

If wiring in conduit is required, cut the line cord close to the control board and make the appropriate wiring connections.

⚠ CAUTION

This water heater **must** be wired on a separate circuit. Failure to wire on a separate circuit may cause improper operation or failure of the electrical components of the water heater. Refer to the “Electrical Connections” section of the Installation and Operating Instructions Manual for complete instructions on electrical wiring and connections to the water heater.

Do not energize the electric circuit before the water heater tank is filled with water.

Spark to Pilot Ignition (IID) Wiring Diagram

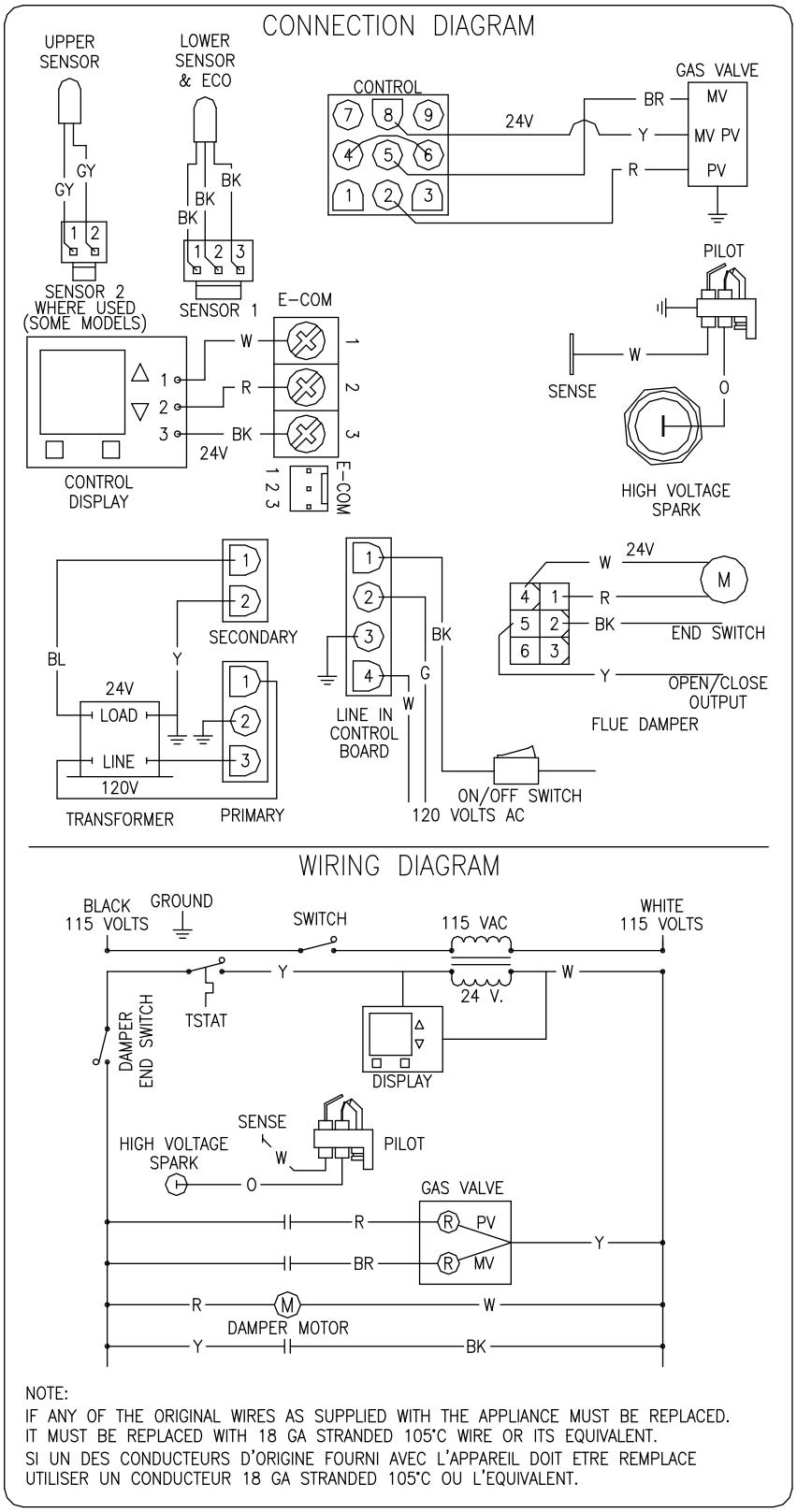

NOTE:
IF ANY OF THE ORIGINAL WIRES AS SUPPLIED WITH THE APPLIANCE MUST BE REPLACED. IT MUST BE REPLACED WITH 18 GA STRANDED 105°C WIRE OR ITS EQUIVALENT.
SI UN DES CONDUCTEURS D'ORIGINE FOURNI AVEC L'APPAREIL DOIT ETRE REMPLACE UTILISER UN CONDUCTEUR 18 GA STRANDED 105°C OU L'EQUIVALENT.

SECTION IX: OPERATING INSTRUCTIONS

Lighting And Shutdown Instructions

Standing Pilot Models

FOR YOUR SAFETY READ BEFORE LIGHTING

WARNING: If you do not follow these instructions exactly, a fire or explosion may result causing property damage, personal injury or loss of life.

A. This appliance has a pilot which must be lighted by hand. When lighting the pilot, follow these instructions exactly.

B. BEFORE LIGHTING smell all around the appliance area for gas. Be sure to smell next to the floor because some gas is heavier than air and will settle on the floor.

WHAT TO DO IF YOU SMELL GAS

- Do not try to light any appliance.
- Do not touch any electric switch; do not use any phone in your building.
- Immediately call your gas supplier from a neighbors phone. Follow the gas supplier's instructions.
- If you cannot reach your gas supplier, call the fire department.

C. Use only your hand to push in or turn the gas control knob. Never use tools. If the knob will not push in or turn by hand, don't try to repair it, call a qualified service technician. Force or attempted repair may result in a fire or explosion.

D. Do not use this appliance if any part has been under water. Immediately call a qualified service technician to inspect the appliance and to replace any part of the control system and any gas control which has been under water.

LIGHTING INSTRUCTIONS

1. STOP! read the safety information above on this label.
2. Set the thermostat to lowest setting.
3. Push in gas control knob slightly and turn clockwise ↷ to "OFF."

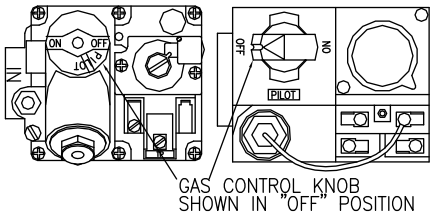

NOTE: Knob cannot be turned from "PILOT" to "OFF" unless knob is pushed in slightly. Do not force.

4. Wait (5) minutes to clear out any gas. If you then smell gas, STOP! Follow "B" in the safety information above on this label. If you don't smell gas, go to next step.
5. Find pilot – follow metal tube from gas control. The pilot is located in the center of the burner rack between two burner tubes.

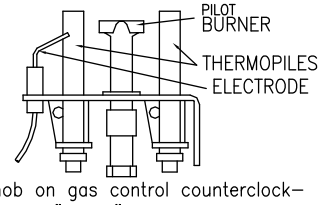

6. Turn knob on gas control counterclockwise ↶ to "PILOT."
7. Push in control knob all the way and hold in. Immediately depress piezo igniter button until you hear a "click" sound, then release. Continue to hold down the gas control knob for approximately one (1) minute after pilot is lit. If pilot is not lit, continue to depress the gas control knob and it should pop back up. Pilot should remain lit. If it goes out, repeat steps 3 through 7.
   - If knob does not pop up when released, stop and immediately call your service technician or gas supplier.
   - If the pilot will not stay lit after several tries, turn the gas control knob to "OFF" and call your service technician or gas supplier.
8. Turn gas control knob counterclockwise ↶ to "ON."
9. Set the thermostat to desired setting.

TO TURN OFF GAS TO APPLIANCE

1. Set the thermostat to lowest setting.
2. Push in gas control knob slightly and turn clockwise ↷ to "OFF." Do not force.

Lighting and Shutdown Instructions

Spark to Pilot Ignition (IID) Models

FOR YOUR SAFETY READ BEFORE OPERATING

WARNING: If you do not follow these instructions exactly, a fire or explosion may result causing property damage, personal injury or loss of life.

A. This appliance is equipped with an ignition device which automatically lights the pilot. Do not try to light the pilot by hand.

B. BEFORE OPERATING smell all around the appliance for gas. Be sure to smell next to the floor because some gas is heavier than air and will settle on the floor.

WHAT TO DO IF YOU SMELL GAS

- Do not try to light any appliance.
- Do not touch any electric switch; do not use any phone in your building.
- Immediately call your gas supplier from a neighbor's phone. Follow the gas supplier's instructions.
- If you cannot reach your gas supplier, call the fire department.

C. Use only your hand to push in or turn the gas control knob(s). Never use tools. If the knob(s) will not push in or turn by hand, don't try to repair it, call a qualified service technician. Force or attempted repair may result in a fire or explosion.

D. Do not use this appliance if any part has been under water. Immediately call a qualified service technician to inspect the appliance and to replace any part of the control system and any gas control which has been under water.

LIGHTING INSTRUCTIONS

1. STOP! read the safety information above on this label.
2. Set the thermostat to lowest setting.
3. Turn off all electrical power to the appliance.
4. This appliance is equipped with an ignition device which automatically lights the pilot. Do not try to light the pilot by hand.
5. Turn off the main power switch.
6. Turn gas control knob(s) clockwise to "OFF."
7. Wait (5) minutes to clear out any gas. If you then smell gas, STOP! Follow "B" in the safety information above on this label. If you don't smell gas, go to next step.
8. Turn on main power.
9. Set the thermostat to desired setting.
10. Turn gas control knob(s) counterclockwise to "ON".

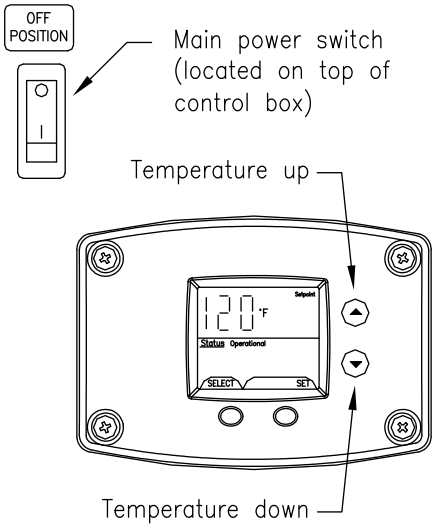

TO TURN OFF GAS TO APPLIANCE

1. Set the thermostat to lowest setting.
2. Turn off the main power switch.
3. Turn gas control knob(s) clockwise to "OFF."

TEMPERATURE ADJUSTMENT

APPROXIMATE TIME/TEMPERATURE RELATIONSHIPS IN SCALDS	
120°F *(49°C)*	More than 5 minutes
125°F *(52°C)*	1½ to 2 minutes
130°F *(54°C)*	About 30 seconds
135°F *(57°C)*	About 10 seconds
140°F *(60°C)*	Less than 5 seconds
145°F *(63°C)*	Less than 3 seconds
150°F *(66°C)*	About 1½ seconds
155°F *(68°C)*	About 1 second

⚠ DANGER

Hotter water increases the risk of scald injury. Scalding may occur within five (5) seconds at a temperature setting of 140°F *(60°C)*. To protect against hot water injury, install an ASSE approved mixing valve in the water system. This valve will reduce point of discharge temperature by mixing cold and hot water in branch water lines. A licensed plumbing professional or local plumbing authority should be consulted.

This water heater is equipped with an energy cut out device to prevent overheating. Should overheating occur or the gas supply fail to shut off, turn off the manual gas control valve to the appliance and call a qualified service technician.

⚠ CAUTION

This water heater, when set at a lower temperature setting, is not capable of producing hot water of sufficient temperature for sanitizing purposes.

NOTICE

Whenever the water heater is filled with cold water, condensate will form on the cool tank surface and drops of water will fall on the hot burner and combustion chamber surfaces producing a “sizzling” noise. Condensation is normal and does not indicate a leak. It will disappear when the tank becomes heated.

The lower the temperature setting, the greater the energy efficiency, both to heat the water and to maintain the storage temperature during standby periods. Lower water temperatures also extend tank life. Remember, no water heating system will provide exact temperatures at all times. Allow a few days of operation at this setting to determine the correct temperature setting consistent with the requirements for the installation.

Condensation does not mean your tank is leaking. Over 40% of reported tank leaks on installation are proven to be condensation. To avoid unnecessary expense and inconvenience, make sure the tank is leaking before calling a service person.

The temperature selector knob of the thermostat has been adjusted to its lowest setting when shipped from the factory.

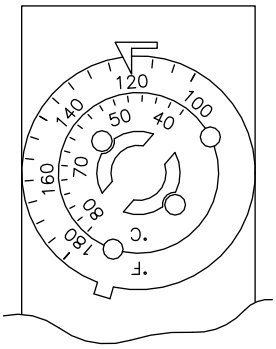

The marking on the thermostat temperature scale (shown at left) is the preferred starting point for setting the temperature control. For energy-efficient operation of your water heater, the suggested initial temperature setting is approximately 120°F *(49°C)*. Households with small children or invalids may require a 120°F *(49°C)* or lower temperature setting to reduce the risk of scald injury. Some states require a lower temperature setting. Full counterclockwise rotation of the temperature selector dial is the minimum temperature setting. Full clockwise rotation of the temperature selector dial is the maximum temperature setting. NOTE: The lower the temperature setting, the greater the energy efficiency, both to heat the water and to maintain its temperature during standby periods. Lower water temperatures also extend tank life. Remember, no water heating system will provide exact temperatures at all times. Allow a few days of operation at this setting to determine the correct temperature setting

consistent with your needs. NOTE: This water heater, when set at a lower temperature setting, is not capable of producing hot water of sufficient temperature for sanitizing purposes.

During the winter season or any cold period, you may desire a higher temperature setting to adjust for the colder incoming water. This adjustment, however, may cause additional condensation to form on the cooler tank surface. This does not mean the tank is leaking. During summer months, the warmer incoming water temperatures will benefit the performance of your water heater and reduce the amount of condensation developed.

TEMPERATURE ADJUSTMENT (24V CONTROL SYSTEM)

The water heater temperature setting is adjusted by using the control display mounted to the front of the control panel of the water heater. The water heater thermostat is set at the lowest setpoint of 70°F when shipped from the factory. The control display shows the temperature setpoint in degrees Fahrenheit (°F) or degrees Celsius (°C), and the status of the water heater ("Idle" or "Heating"). If the water heater is functioning normally, the display will also show "Operational".

For energy efficient operation of your water heater, the suggested initial temperature setting is 120°F *(49°C).* During the winter season, or any cold period, you may desire a higher temperature setting to adjust for the colder incoming water. This adjustment, however, may cause additional condensation to form on the cooler tank surface. This does not mean the tank is leaking. During summer months, the warmer incoming water temperatures will benefit the performance of your water heater and reduce the amount of condensation developed.

Condensation does not mean your tank is leaking. Over 40% of reported tank leaks on installation are proven to be condensation. To avoid unnecessary expense and inconvenience, make sure the tank is leaking before calling a service person.

⚠ WARNING

If the water heater display does not show "Operational" in the "Status" indicator, there may be an operating malfunction with the water heater. If this is the case, a numeric code will be displayed. Refer to the label next to the display for the definition of the error code and call your plumbing professional or service agent to service the water heater. Do not try to reset the water heater without having a qualified service person to diagnose and correct the problem. If the display is blank or does not show an error code, make sure there is power to the water heater.

Setting the water temperature to the maximum set point can result in scalding hot water delivered to the faucets. It is highly recommended that the maximum setpoint be adjusted to the lowest temperature possible for the needs of the installation. See following section to change the maximum setpoint limit (max setpoint). Make sure the water heater control display is not in a public area that can result in the temperature settings being improperly adjusted. See previous warning on scalds and an ASSE approved mixing valve.

NOTICE

When the maximum setpoint is reached, the display will show "Max Setpoint" without the setpoint value. The maximum setting is equal to approximately 180˚F *(82˚C).*
The default temperature setpoint from the factory is 70˚F *(21˚C).*

Water Heater Display and Control Buttons

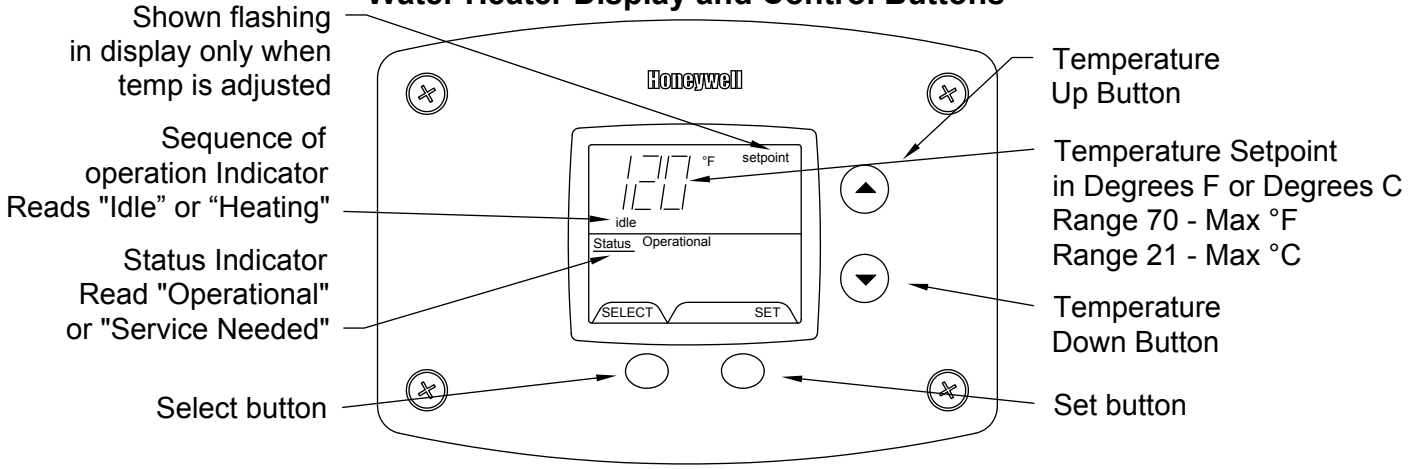

To Increase Setpoint Temperature

Step 1: Depress and hold “Temperature Up” button until desired setpoint temperature appears in the display.

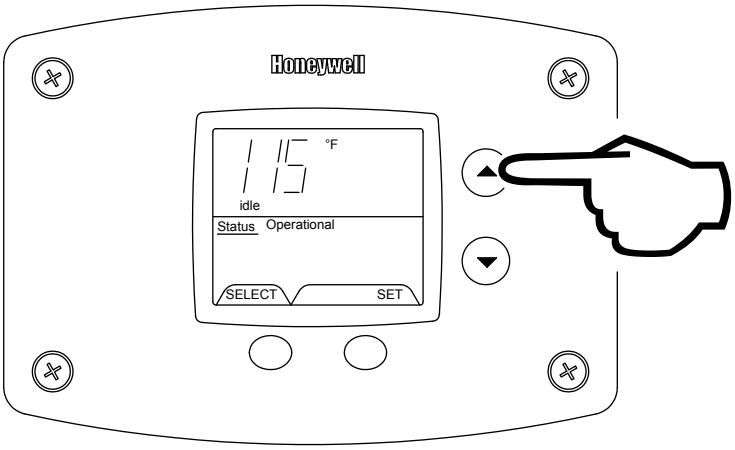

Step 1

Step 2: “Setpoint” indicator begins flashing in the display after pressing “Temperature Up” button.

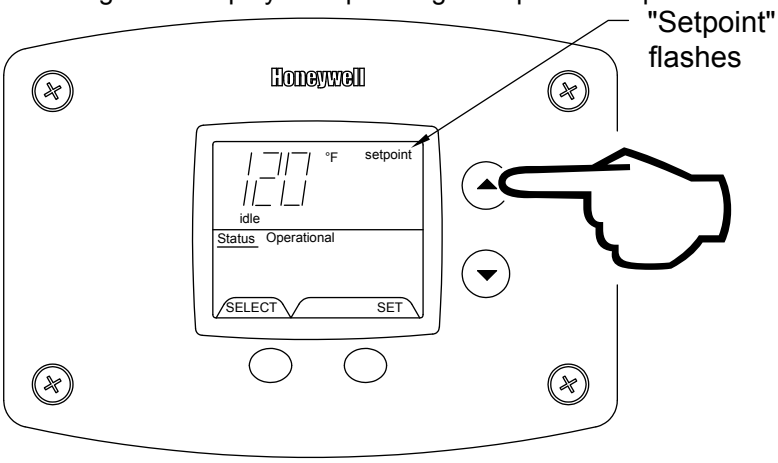

Step 2

Step 3: Press “SET” button for new setting to take effect immediately. “Setpoint” will stop flashing. If the “SET” button is not pressed, the new temperature setting will take effect in approximately 10 seconds.

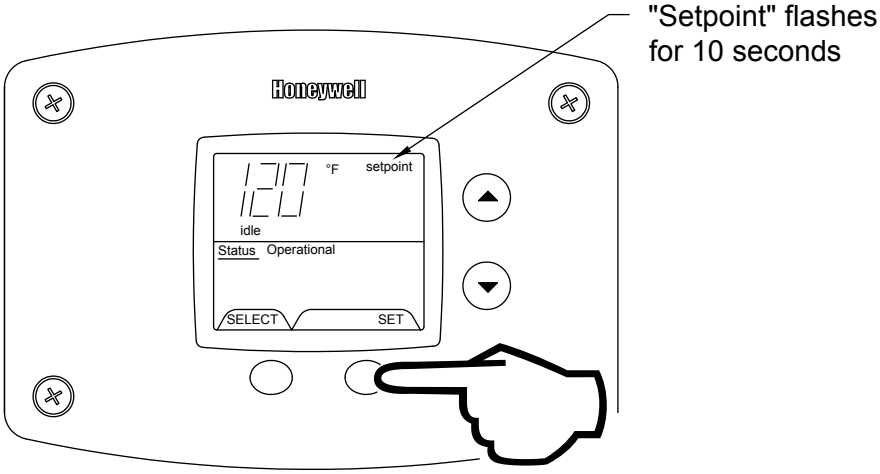

Step 3

Press SET Button for setting to to take effect immediately

To Decrease Setpoint Temperature

Step 1: Depress and hold “Temperature Down” button until desired setpoint temperature appears in the display.

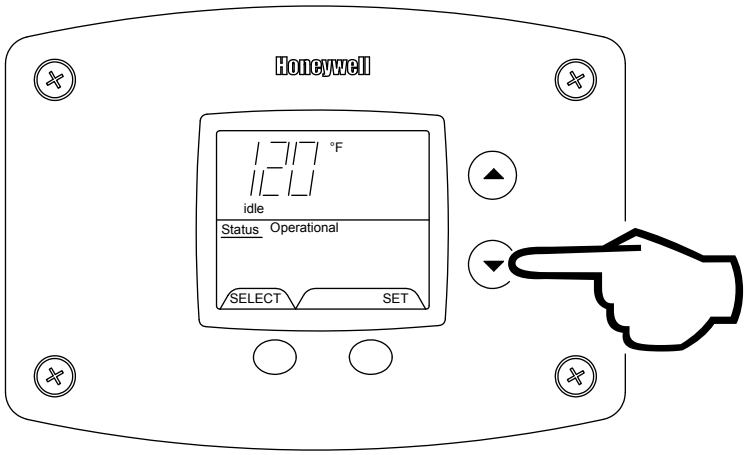

Step 1

Step 2: “Setpoint” indicator begins flashing in the display after pressing “Temperature Down” button.

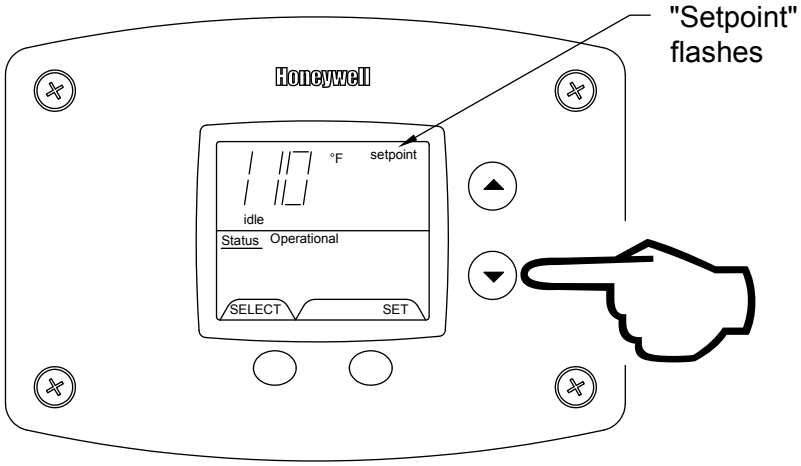

Step 2

Step 3: Press “SET” button for new setting to take effect immediately. The setpoint will stop flashing. If the “SET” button is not pressed, the new temperature setting will take effect in approximately 10 seconds.

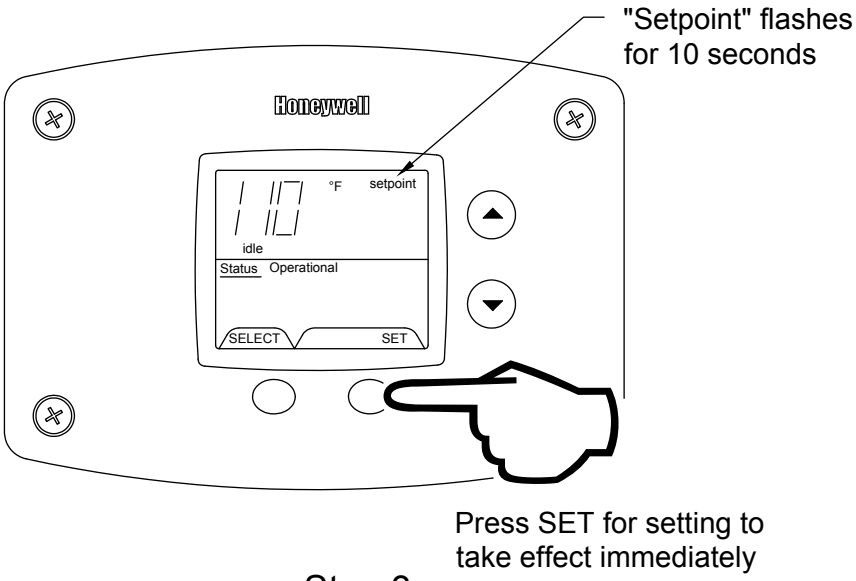

Step 3

To Change Temperature Format in Display from °F to °C or ˚C to ˚F:

Step 1: Press “SELECT” button until °F/°C is displayed.

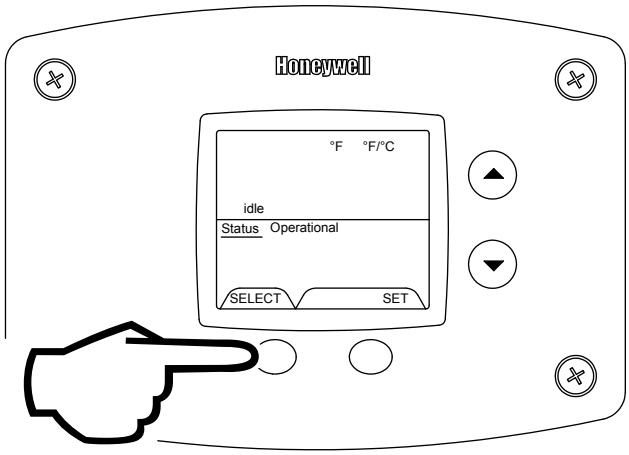

Press select

Step 1

Step 2: Press “SET” button to change temperature format. Symbol °F/°C will flash.

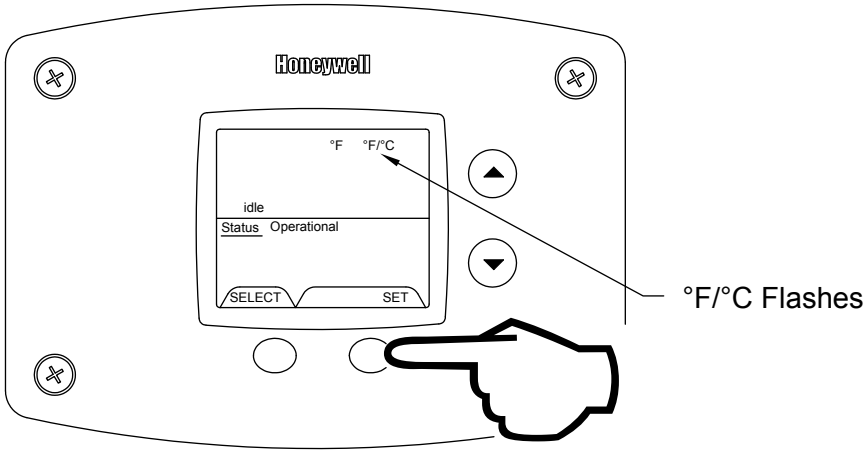

Step 2

Step 3a: Press “Temperature Up” button to change temperature format to °C.

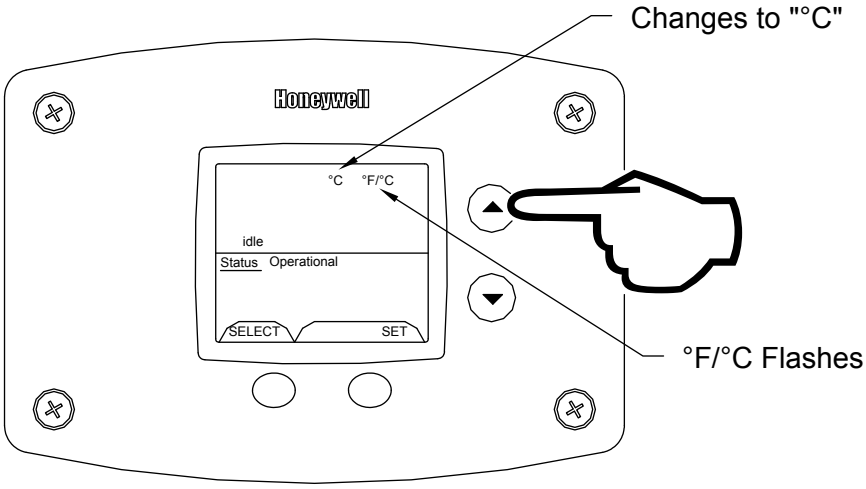

Step 3a

Step 3b: Press “Temperature Down” button to change temperature format to °F.

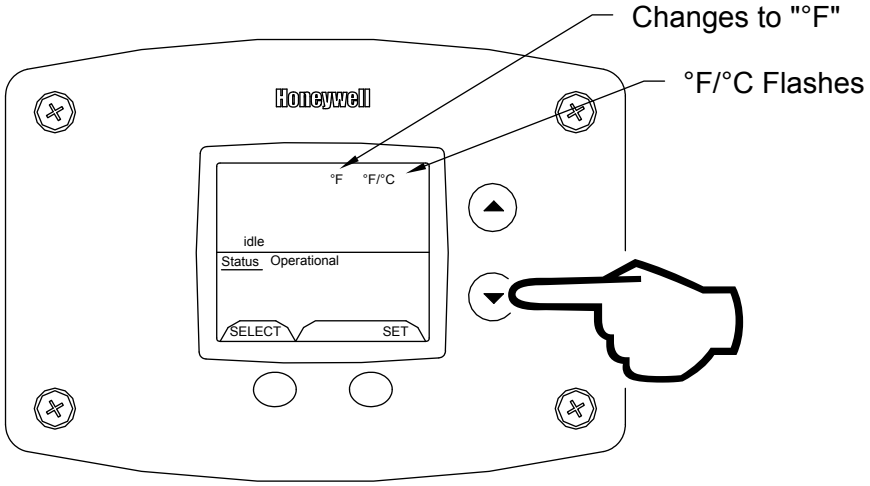

Step 3b

Step 4: Press “SET” button to confirm ˚F or ˚C format. °F/°C will stop flashing. Setpoint display will appear in the format selected (˚F or ˚C) in 10 seconds.

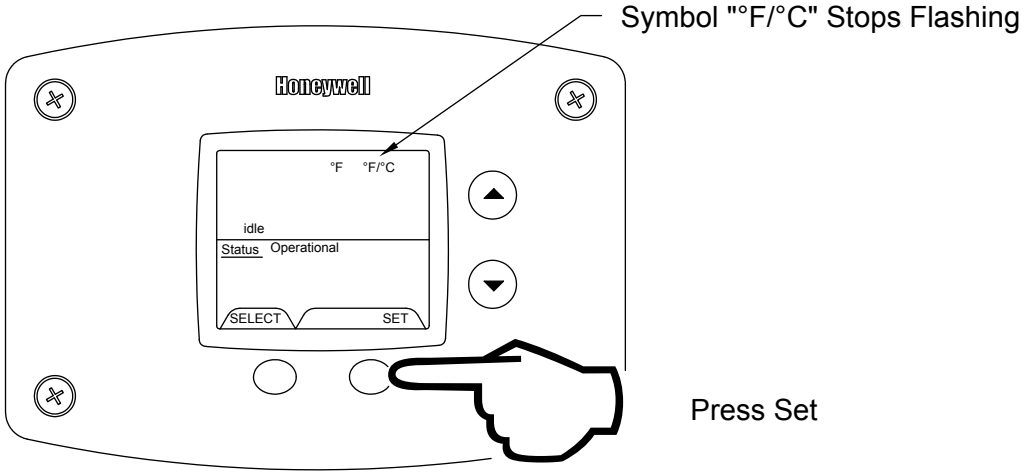

Step 4

Step 5: Pressing “SELECT” button will return display to setpoint in format selected (˚F or ˚C) immediately.

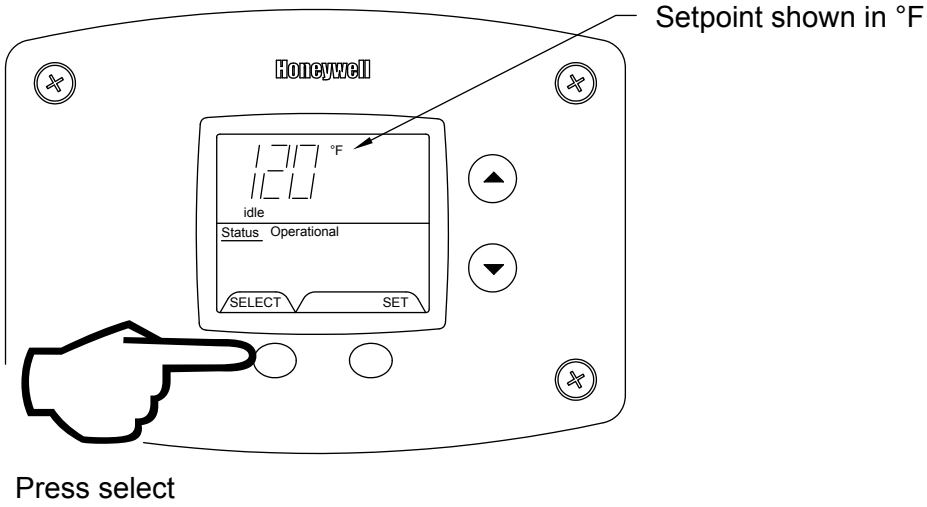

Step 5

An automatic gas shut-off device (ECO) is incorporated in the sensor and control board which will shut off all gas supply to the burner and pilot if the water heater temperature exceeds 200°F *(93°C).* Should the ECO function (open), the water temperature should be reduced to approximately 120°F *(49°C)* and follow applicable Lighting Instructions to place the water heater in operation. The water heater must have the problem corrected by a qualified service person before putting the water heater back in operation. It is recommended that all service work be performed by a qualified service agency.

If the water heater is to remain idle for 30 days or more or is subjected to freezing temperatures while shut off, the water heater and piping should be fully drained (See “To Drain the Water Heater”) and the drain valve should be left fully open.

⚠ WARNING

Hydrogen gas can be produced in an operating water heater that has not had water drawn from the tank for a long period of time (generally two weeks or more). Hydrogen gas is extremely flammable. To prevent the possibility of injury under these conditions, we recommend the hot water faucet to be open for several minutes at the kitchen sink before you use any electrical appliance which is connected to the hot water system. If hydrogen is present, there will be an unusual sound such as air escaping through the pipes as hot water begins to flow. Do not smoke or have open flame near the faucet at the time it is open.

Burner Flame Check

At the time of installation and at periodic intervals (about every 3 months), a visual check of the pilot and burner flames should be made to determine if they are burning properly. No adjustment to the air shutter should be required for this heater. The burner flames should be blue with yellow tips. A blue-orange flame is characteristic of operation on liquefied petroleum (LP) gas. If the burner flame does not appear as described, an air shutter adjustment may be required. The burner tube flames should light smoothly from the pilot.

NOTICE

IMPORTANT- In the event of an emergency, turn off the gas and electric (if applicable) to the appliance.

IMPORTANT- The water heater should be inspected at a minimum annually by a qualified service technician for damaged components and/or joints not sealed. DO NOT operate this water heater if any part is found damaged or if any joint is found not sealed

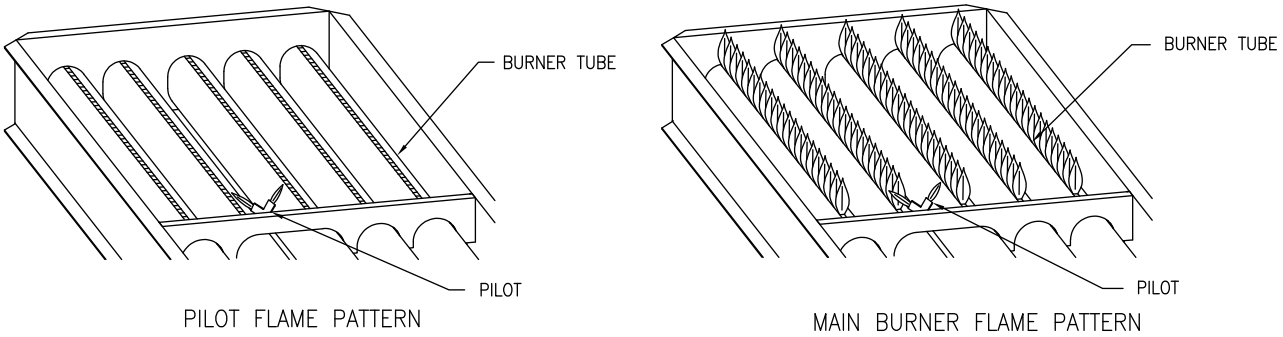

Figure 8

⚠ WARNING

Do not run out of propane gas. Damage to the water heater may occur.

⚠ WARNING

Water heaters are heat producing appliances. To avoid damage or injury there must be no materials stored against the water heater or vent system, and proper care must be taken to avoid unnecessary contact (especially by children) with the water heater and vent system. **UNDER NO CIRCUMSTANCES SHALL FLAMMABLE MATERIALS, SUCH AS GASOLINE OR PAINT THINNER BE USED OR STORED IN THE VICINITY OF THIS WATER HEATER, VENT SYSTEM OR IN ANY LOCATION FROM WHICH FUMES COULD REACH THE WATER HEATER OR VENT SYSTEM.**

SECTION X: MAINTENANCE

The following maintenance should be performed by a qualified service technician at the minimum periodic intervals suggested below. In some installations, the maintenance interval may be more frequent depending on the amount of use and the operating conditions of the water heater. Regular inspection and maintenance of the water heater will help to insure safe and reliable operation.

1. Annual checks of the ignition systems (millivolt and electronic), temperature controls and any other water heater controls are necessary to ensure proper operation. Also, all safety shut-off valves must be checked to verify proper operation and tightness.
2. The flow of combustion and ventilation air MUST NOT be restricted. Clear the combustion air openings of any dirt, dust, or other restrictions. WARNING! The combustion ventilation system may be HOT.
3. At all times keep the water heater area clear and free from combustible materials, gasoline and other flammable vapors and liquids.
4. Bi-annually conduct a visual check of the pilot and burner flames to determine that they are burning properly. See “Burner Flame Check” section for example of proper burner flame pattern.
5. Annually remove the main burner rack assembly to clean orifices and related parts of any dirt or other foreign material. Inspect the burner ports for obstructions or debris and clean with a wire brush, vacuum, or use a mild detergent solution to clean as needed. NOTE: It is imperative for proper operation of the water heater that the main burner rack be replaced in the original location.

⚠ WARNING

When lifting lever of the combination temperature and pressure relief valve, hot water will be released under pressure. Be careful that any released water does not result in bodily injury or property damage.

Keep clear of the combination temperature and pressure relief valve discharge line outlet. The discharge may be hot enough to cause scald injury. The water is under pressure and may splash.

⚠ WARNING

Do not run out of propane gas. Damage to the water heater may occur.

6. At least once a year, check the combination temperature and pressure relief valve to insure that the valve has not become encrusted with lime. Lift the lever at the top of the valve several times until the valve seats properly without leaking and operates freely.

NOTICE

IMPORTANT- If the combination temperature and pressure relief valve on the appliance discharges periodically, this may be due to thermal expansion in a closed water supply system. Contact the water supplier or local plumbing inspector on how to correct this situation. Do not plug the combination temperature and pressure relief valve outlet.

7. Monthly drain off a gallon of water to remove silt and sediment. **WARNING!** This water may be **HOT**.
8. All models are equipped with a cleanout opening to aid in removal of hard water deposits from the tank bottom. If this water heater operates under hard water conditions, the following should be performed at least every 3 months: Drain the water heater. Remove the cleanout jacket cover and tank cover. When cleaning the tank, care must be taken to avoid trying to break deposits loose as this could damage the glass lining and shorten the life of the water heater. After cleaning, replace the cleanout tank cover and jacket cover, and refill with water.
9. A sacrificial anode rod has been installed to extend tank life. The anode rod should be inspected annually (every year) and replaced when necessary to prolong tank life. Water conditions in your area will influence the time interval for inspection and replacement of the anode rod. Contact the plumbing professional who installed the water heater or the manufacturer listed on the rating plate for anode replacement information. The use of a water softener may increase the speed of anode consumption. More frequent inspection of the anode is needed when using softened (or phosphate treated) water.
10. The venting system must be inspected at least once a year to ensure against leakage of exhaust products.

⚠ CAUTION

FOR YOUR SAFETY, **DO NOT** ATTEMPT REPAIR OF COMBINATION GAS CONTROL, BURNERS OR GAS PIPING. REFER REPAIRS TO A QUALIFIED SERVICE TECHNICIAN.

Contact your supplier, plumbing professional or contact the company at the address given on the rating plate of the water heater for replacement parts.

Provide the part name as well as the model and serial number(s) of the water heater(s) when ordering parts.

READ THE WARRANTY FOR A FULL EXPLANATION OF THE LENGTH OF TIME THAT PARTS AND THE WATER HEATER ARE WARRANTED.

Manufactured under one or more of the following U.S. Patents: RE.34,534; B1 5,341,770; 4,416,222; 4,628,184; 4,669,448; 4,672,919; 4,808,356; 4,829,983; 4,861,968; 4,904,428; 5,000,893; 5,023,031; 5,052,346; 5,081,696; 5,092,519; 5,115,767; 5,199,385; 5,277,171; 5,372,185; 5,485,879; 5,574,822; 5,596,952; 5,660,165; 5,682,666; 5,761,379; 5,943,984; 5,954,492; 5,988,117; 6,142,216; 6,395,280 6,684,821; 7,063,132; 7,007,748
Other U.S. and Foreign patent applications pending. Current Canadian Patents: 1,272,914; 1,280,043; 1,289,832; 2,045,862; 2,092,105; 2,107,012; 2,108,186; 2,112,515

Complete the following information and retain for future reference:

Model No:_____

Serial No:_____

Service Phone
Days:_____ Nights:_____

Address:_____

Supplier:_____

Supplier Phone No:_____

TYPICAL INSTALLATION

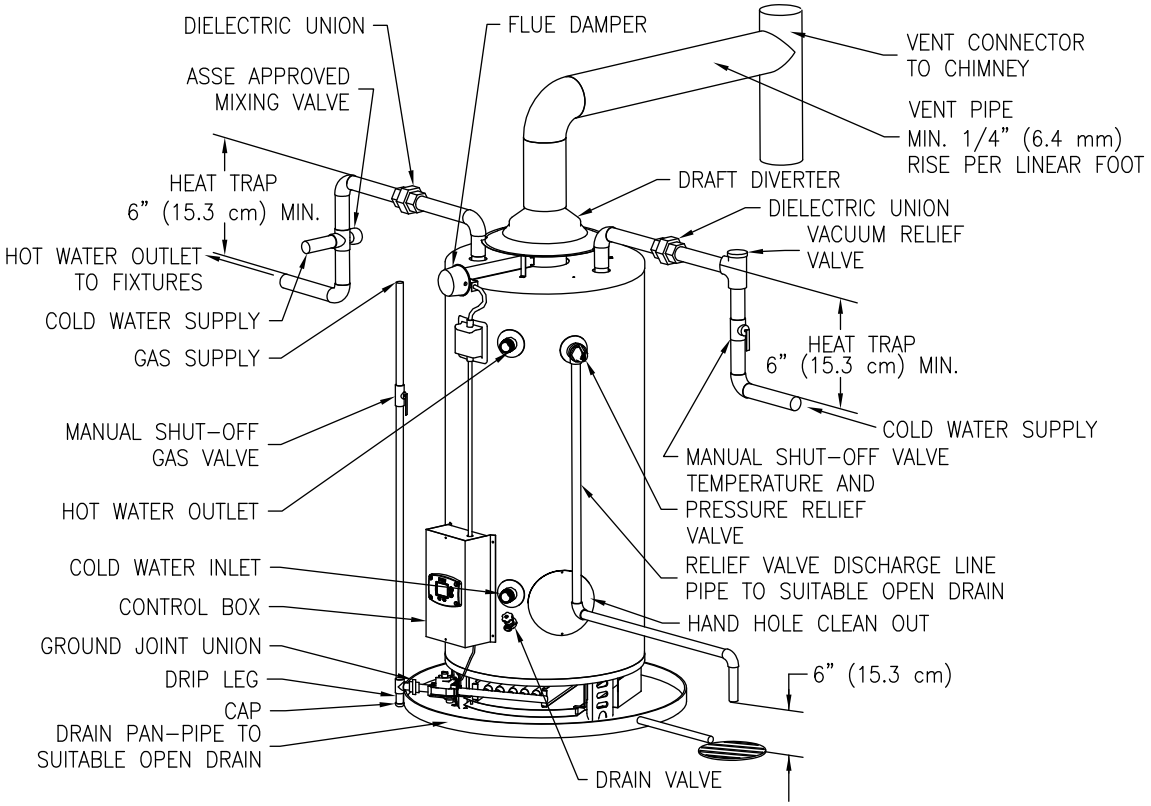

SECTION XI: DIAGNOSTIC AND TROUBLESHOOTING GUIDE

OPERATING AND TROUBLESHOOTING GUIDE-SEQUENCE OF OPERATION (STANDING PILOT WITH MILLI-VOLT CONTROL)

1. With the pilot lit, the pilot burner assembly power pile generates milli-voltage to energize the magnet coil in the gas valve permitting gas flow through pilot and to the main gas ports of the valve. Simultaneously, milli-voltage is also directed to the ECO (energy cut off) switches located in the thermostat.
2. Set the control knob on the gas valve to “ON” position.
3. Set the adjustable thermostat to desired water temperature.
4. As the water temperature decreases below the thermostat setting in the tank, the contacts in the thermostat will close, thereby energizing the circuit to the main valve permitting the flow of gas to the main burner.
5. A slow opening feature of the gas valve will cause the burners to light slowly at a reduced manifold pressure. After a few seconds (allowing the combustion system to stabilize), the manifold pressure will increase to the maximum setting of the gas valve.
6. The burners will continue to fire until the thermostat becomes satisfied, where upon the contacts will open, de-energize the main valve circuit, and the burners will extinguish.
7. If the temperature rises above fixed ECO (energy cut off) setting, the ECO contacts will open simultaneously de-energizing pilot and main valve circuits, and the burners will be extinguished.

DIAGNOSTIC GUIDE FOR HONEYWELL INTEGRATED CONTROL SYSTEM FOR FLUE DAMPER MODELS-SEQUENCE OF OPERATION

1. When the tank temperature drops below the temperature setpoint on the display, the control opens the flue damper to start the ignition sequence.
2. When the flue damper reaches the full open position, the end switch in the damper closes, completing the 24 volt circuit to the control.
3. After the end switch closes, the control sends 24 volt power to the pilot valve “PV” terminals on the gas valve allowing pilot gas to flow to the pilot. The control also sends high voltage through the pilot electrode to spark to the pilot hood and ignite the pilot gas. If the pilot does not ignite within 90 seconds, the pilot valve is denergized and the sparking stops for 65 seconds, and will attempt to ignite the pilot two more times. If the pilot does not light on the 3rd attempt, the control will go into “soft lockout” for 1 hour and then will repeat the 3 ignition attempts.
4. When the pilot is lit, the flame is sensed by the flame sense rod. The flame sense signal received by the control board causes the sparking to stop and the main gas valve to open. The main burners ignite from the pilot flame. The pilot is continually monitored by the flame sensing circuit. If for any reason, the pilot flame is not sensed by the flame sensing circuit, the gas valves close. After a 65 second delay, the pilot valve opens and the pilot electrode sparks to relight the pilot. The same sequence will occur in the event of a power supply or gas supply interruption.
5. The main burners continue to operate until the water temperature in the tank increases past the control setpoint, which will cause the gas valve to close. The flue damper closes shortly after the gas valve closes. The water heater remains in the standby mode until the temperature drops below the setpoint and initiates another heating cycle.
6. If for some reason, the tank temperature should reach or exceed 200˚F, then the control closes the gas valve and goes into a “hard lockout” state and will not operate until reset by a qualified service person. The display will read “error code 65”, which indicates the tank high limit temperature has been exceeded. No attempt should be made to reset the control until a service person has corrected the cause of the high limit condition. Refer to the diagnostic service section at the end of this Installation and Operating Instructions Manual.

ACCESSING SERVICE MODE ON THE WATER HEATER DISPLAY (FOR SERVICE PERSONNEL ONLY)

The display has a “service mode” for changing the maximum setpoint and accessing information in aiding servicing of the water heater. This procedure is for service and installation personnel only. To enter the Service Mode, follow the steps illustrated below:

⚠ WARNING

The following procedure is for service and installation personnel only. Resetting lockout conditions without correcting the malfunction can result in a hazardous condition.

Step 1: Press “Select” and “Temperature Up” buttons together and hold for 3 seconds until “Max Setpoint” is shown in the display.

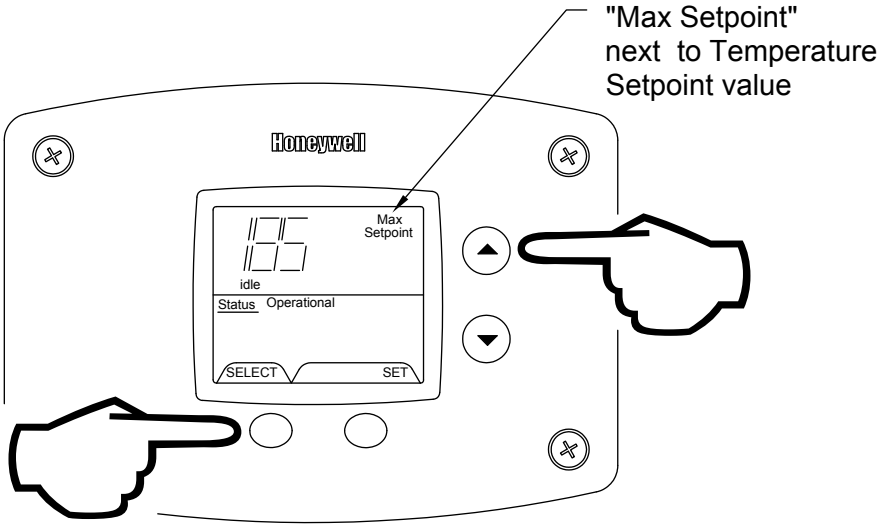

NOTICE

30 Seconds after the last button press, the display will automatically return to the “User Mode”. Simultaneously pressing the “Select” and “Temperature Up” buttons will switch the display immediately to the “User Mode”.

Step 2: Pressing “Select” button will change display to next mode

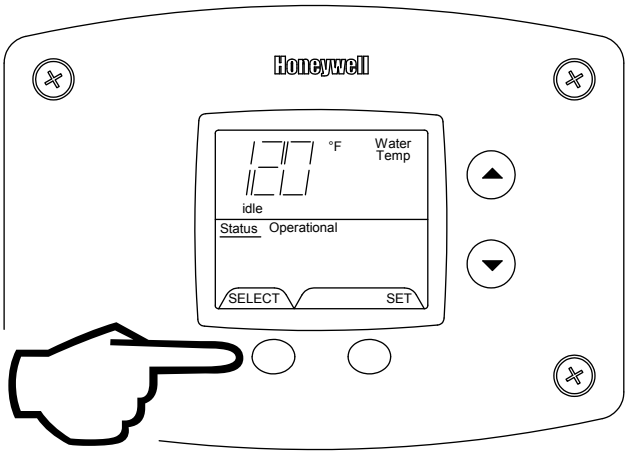

The following is the sequence of modes available in “Service Mode” by pressing the “Select” button:

Error Code Number (Display/Reset). This is only shown if there is an operating error in the “User Mode”.

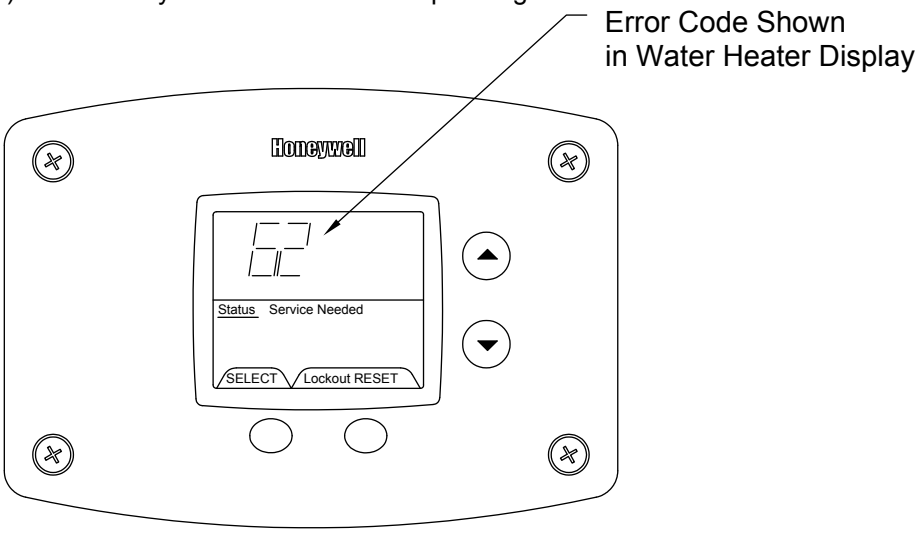

1. Max Setpoint (Display/Change)

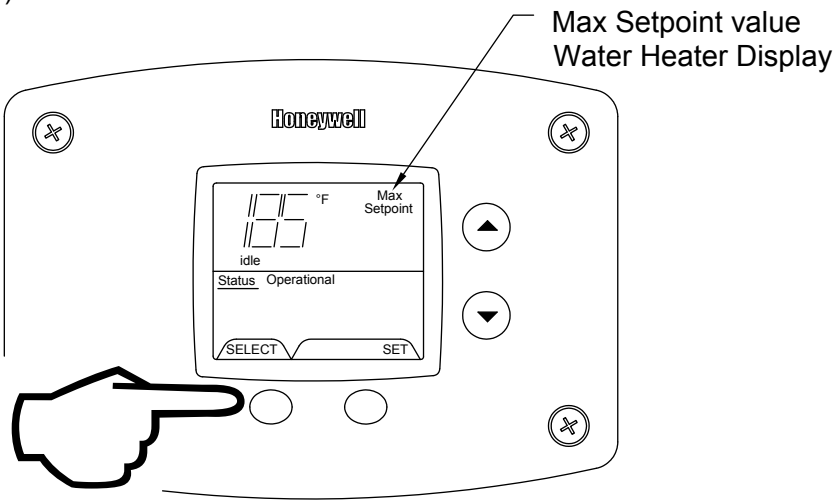

2a. Water Temperature Average (Displays average if there are two sensors – sensor temperature displayed if single sensor is used).

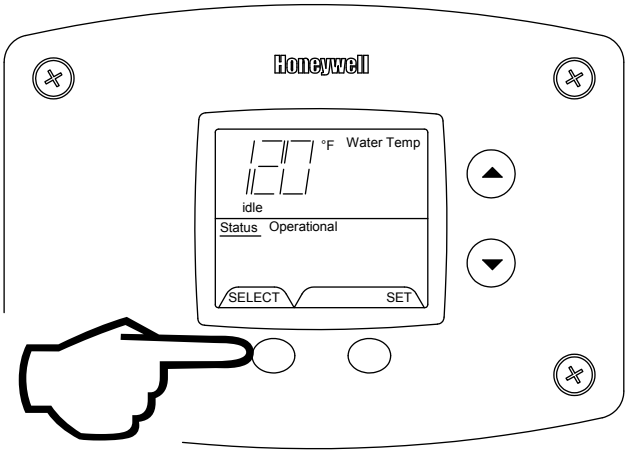

2b. Water Temperature - Upper Sensor (Displays if there is an upper sensor – some models)

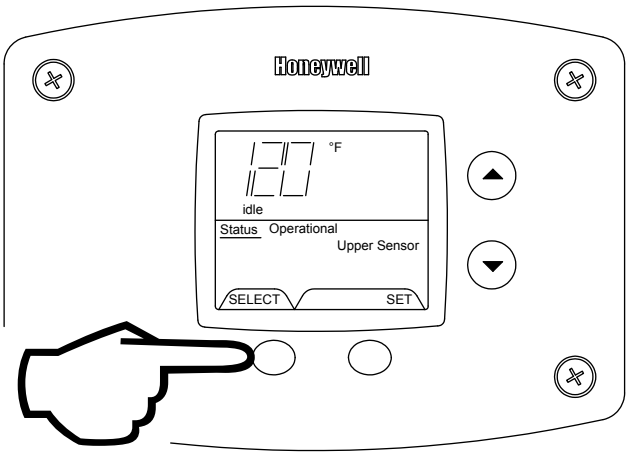

2c. Water Temperature - Lower Sensor (Displays if there are two sensors)

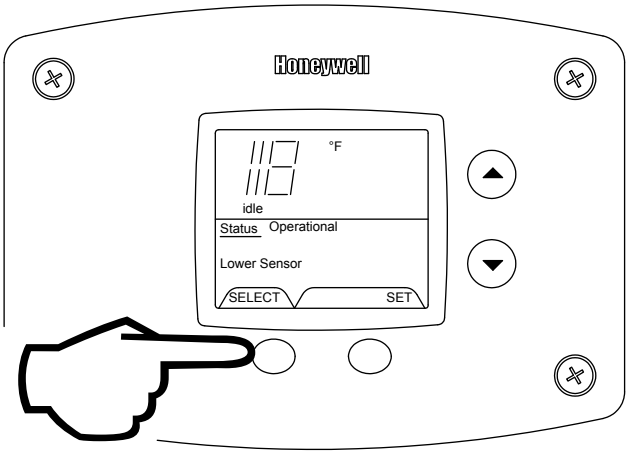

3. Flame Current of Pilot Flame Sensor (Displays only in the Heating Cycle)

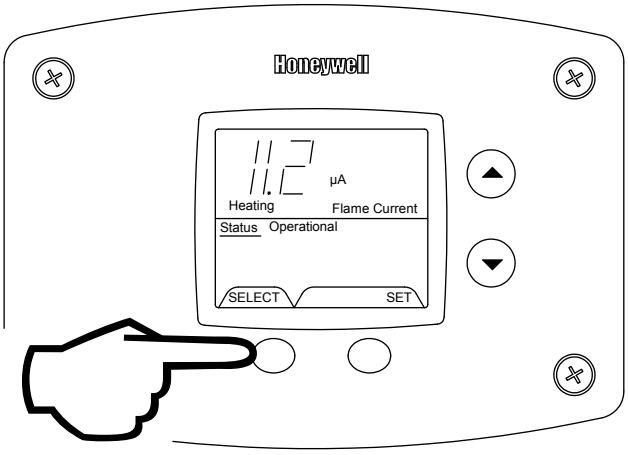

4. Setpoint (Display/Change)

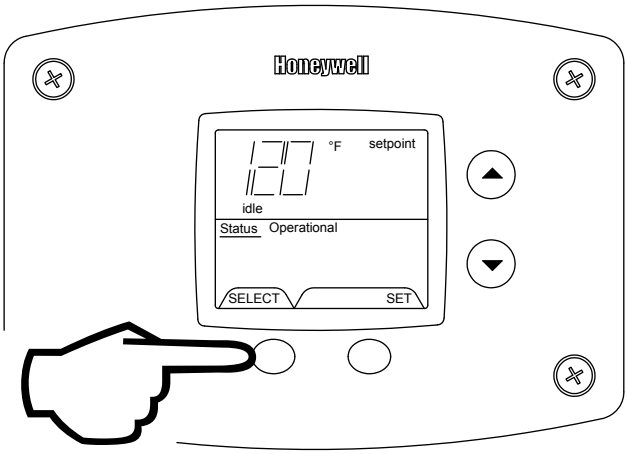

5. ˚F/˚C (Display/Change)

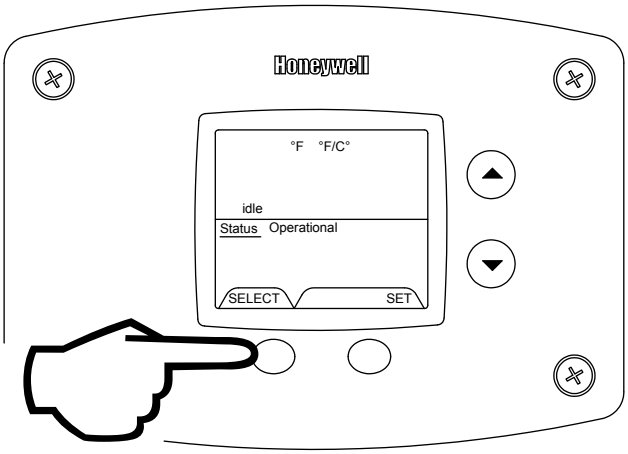

6. Differential (Display only – shows the differential of the thermostat)

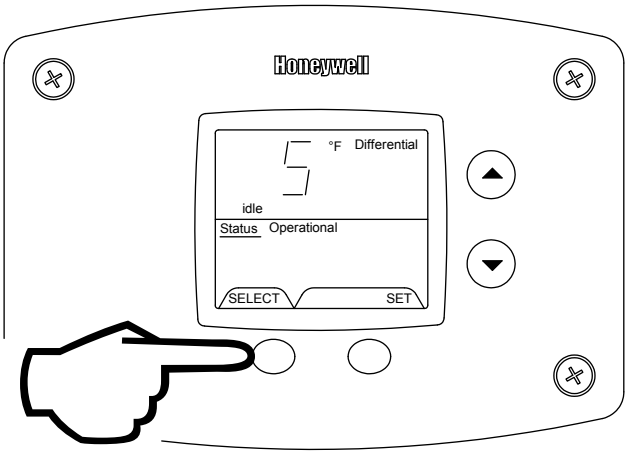

7. Software Version (Display only)

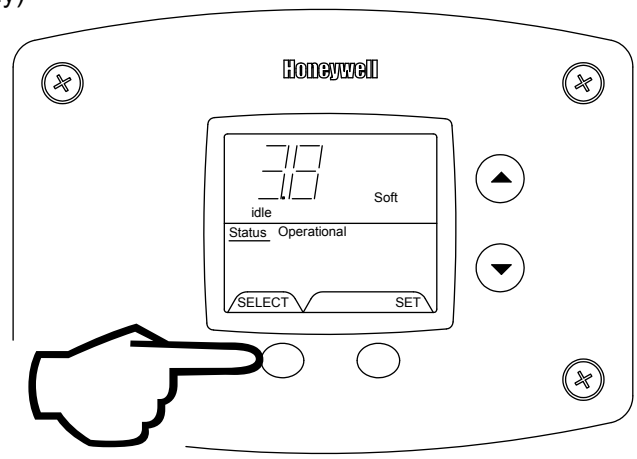

8. Error Code History (Displays if there are present error codes or up to 10 previous error codes). Water Heater Display will show -- if there are no error codes.

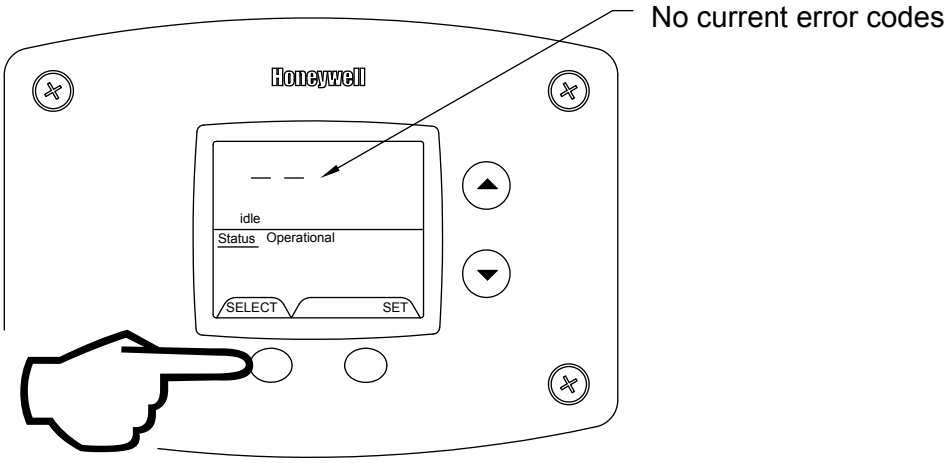

To change the Maximum Setpoint Limit (Max Setpoint) for the temperature setpoint:

⚠ WARNING

Setting the water temperature to the maximum set point can result in scalding hot water delivered to the faucets. It is highly recommended that the maximum setpoint be adjusted to the lowest temperature possible for the needs of the installation. See following section to change the maximum setpoint limit (max setpoint). Make sure the water heater control display is not in a public area that can result in the temperature settings being improperly adjusted. See previous warning on scalds and an ASSE approved mixing valve.

Step 1: In service mode press the “Select” button until “Max Setpoint” is displayed.

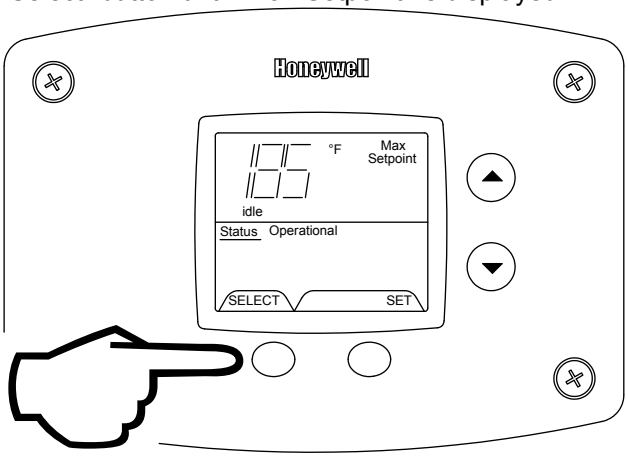

Step 2: Press “Set” button to enter setting mode. “Max Setpoint” will flash to indicate setting mode.

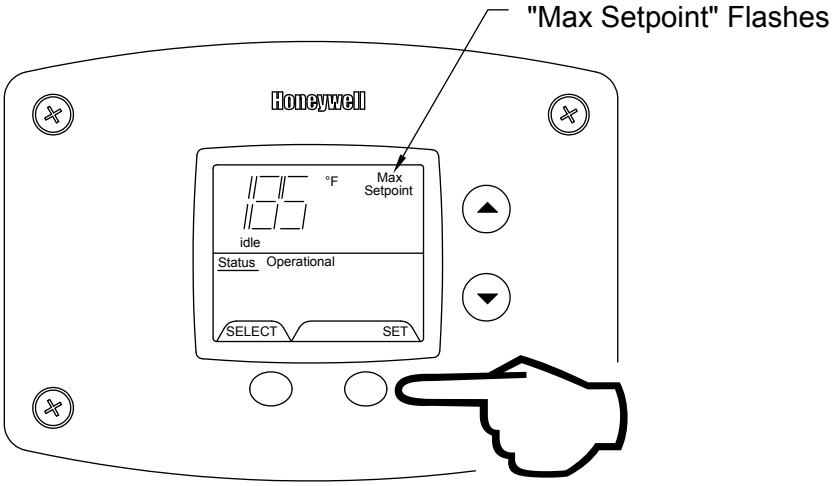

Step 3: Press the “UP” or “DOWN” buttons to change the maximum setpoint value. This will limit the maximum setpoint the user can select. Note: The maximum setpoint is approximately 180˚F.

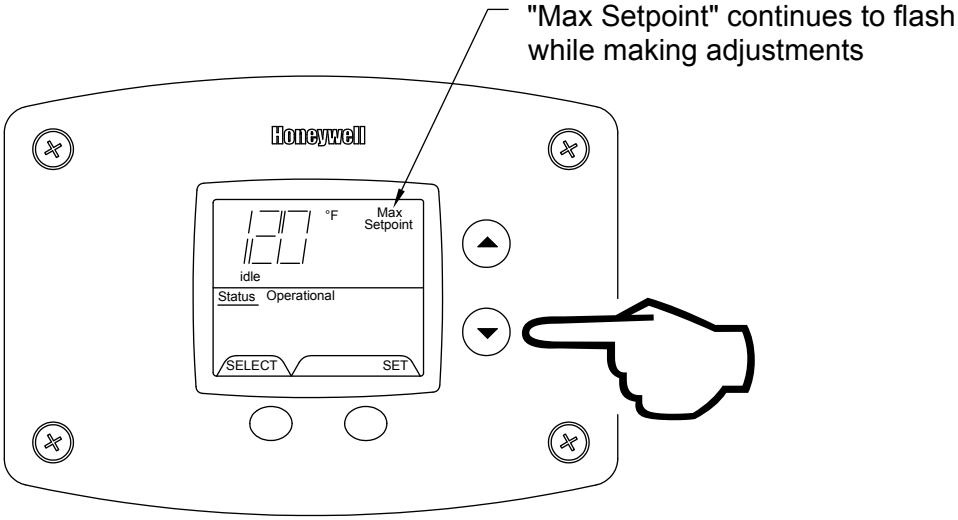

Step 4: Press “Set” button to confirm new “Max Setpoint” value and stop setting mode.

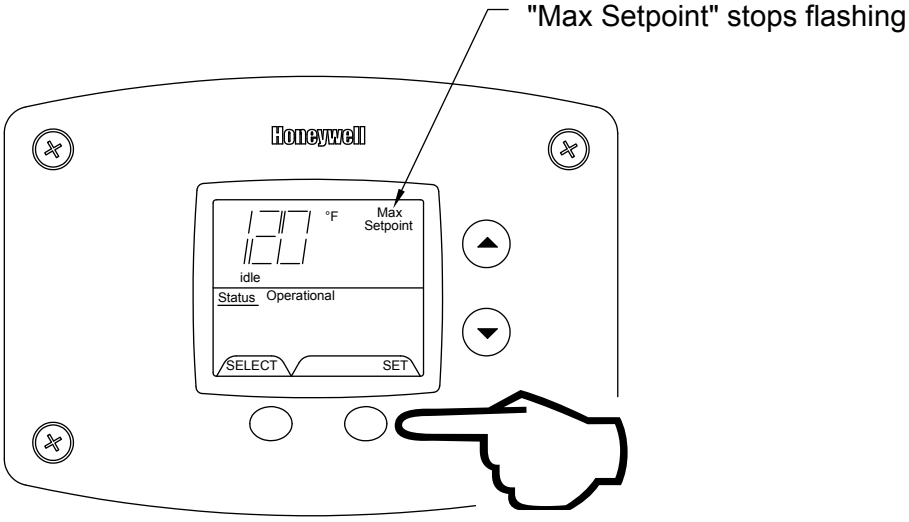

Step 5: 30 Seconds after the last button press, the Water Heater Display will go back to “User Mode”. It will read “Max Setpoint” without showing a temperature value if the temperature setpoint is at the maximum setting. The Water Heater Display can be set back to the “User Mode” immediately by pressing both the “Temperature Up” and “Select” buttons together for 3 seconds.

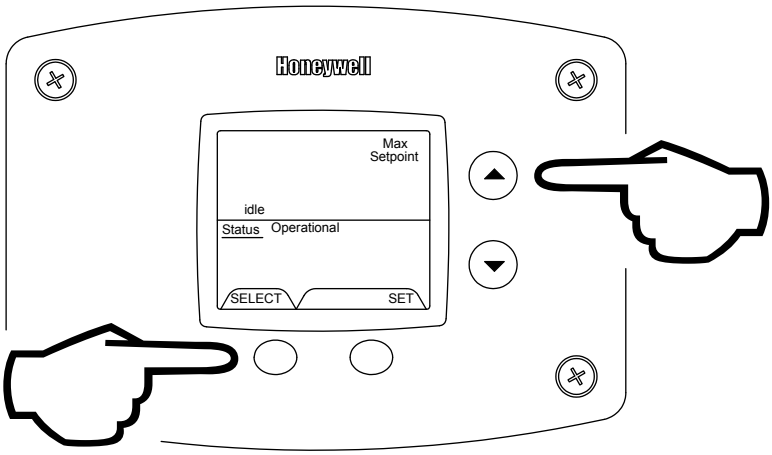

Exiting Service Mode

Display of Water Temperature:

Step 1: In Service Mode, Press the “Select” button until “Water Temp” is displayed in the upper right section of the water heater display. For water heaters using two temperature sensors in the tank, this will be the average reading between the two sensors. For water heaters using a single sensor, this is the reading for the sensor.

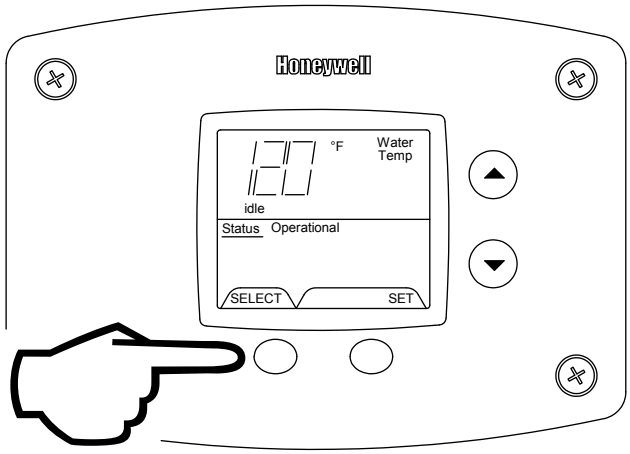

Step 2: For water heaters using two temperature sensors, pressing the “Select” button again displays the Upper Sensor temperature reading. “Upper Sensor” will be displayed in the lower right side of the status window of the water heater display.

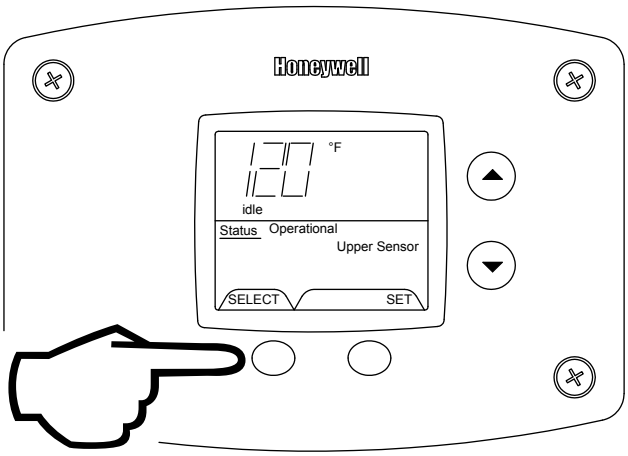

Step 3: For water heaters using two temperature sensors, pressing the “Select” button again displays the Lower Sensor temperature reading. “Lower Sensor” will be displayed in the lower left side of the status window of the water heater display.

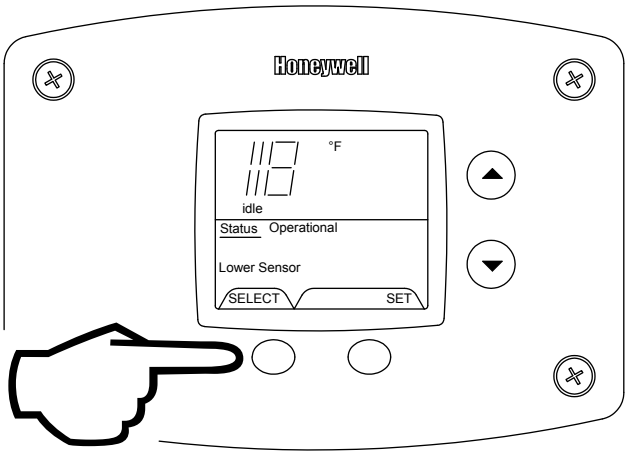

To Display Flame Sense Current of the Pilot Flame Sensor:

The pilot flame sense current is available only when the burners are in operation. Step 1: Make sure the status displays “Heating” or draw enough hot water to start the burners. Step 2: Enter the “Service Mode” described previously. Step 3: Press the “Select” button until a number value is displayed with “Flame Current” to the right of the number. The value displayed is in microamps (μA).

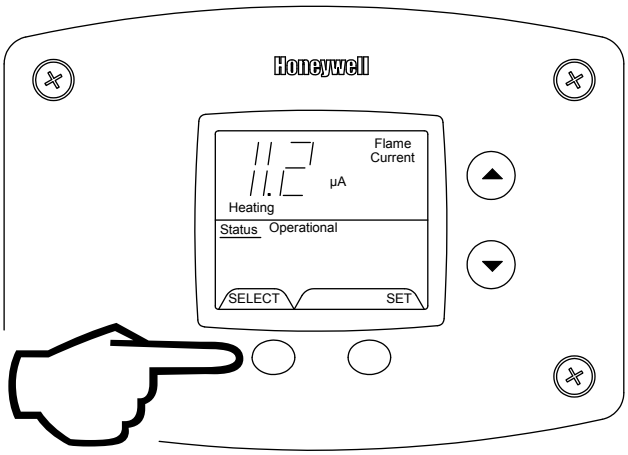

To Display and Change Temperature Setpoint:

Step 1: In “Service Mode” press the “Select” button until “Setpoint” is shown in the water heater display.

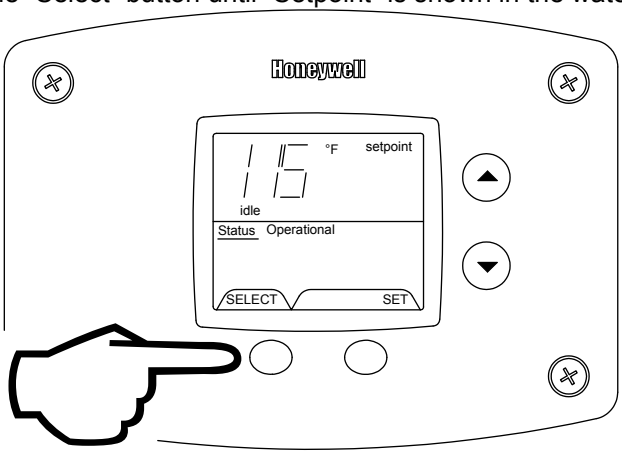

Step 2: Press the “Set” button to enter the setting mode. “Setpoint” will flash in the water heater display.

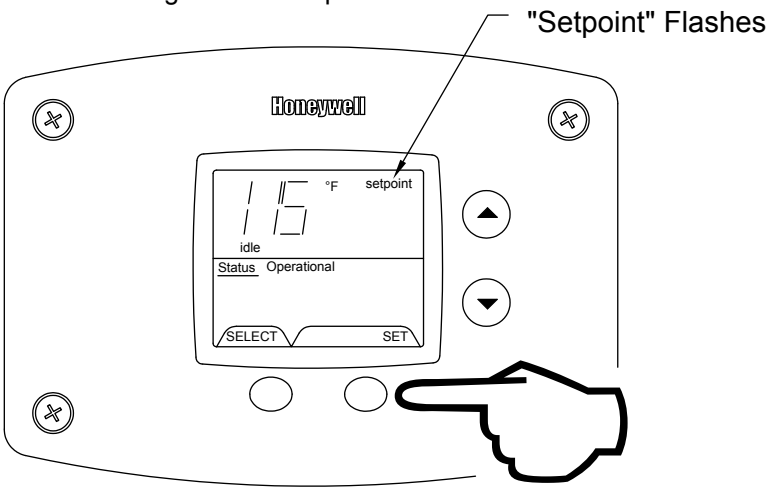

Step 3: To raise the temperature setpoint, press the “Temperature Up” button until the desired temperature is shown on the water heater display.

NOTICE

Note: The maximum temperature that can be set in the Water Heater Display is limited to the “Max Setpoint” described previously. To change the “Max Setpoint”, refer to the procedure “To Change the Maximum Setpoint Limit…” described previously under “Accessing the Service Mode on the Water Heater Display”.

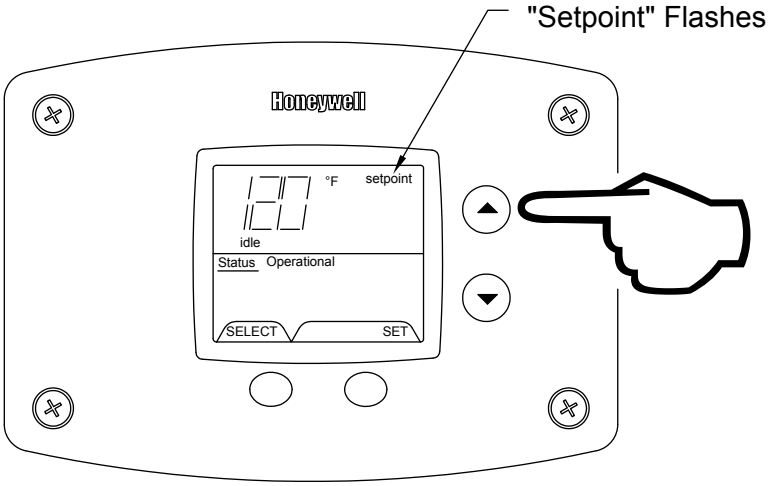

Step 4: To lower the temperature setpoint, press the “Temperature Down” button until the desired temperature is shown on the water heater display.

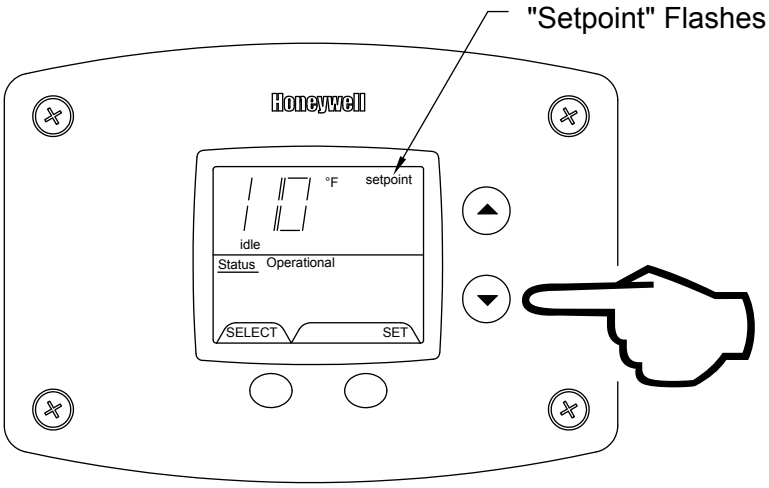

Step 5: When the desired setpoint is reached on the water heater display, press the “Set” button to confirm the new setpoint. “Setpoint” stops flashing in the water heater display.

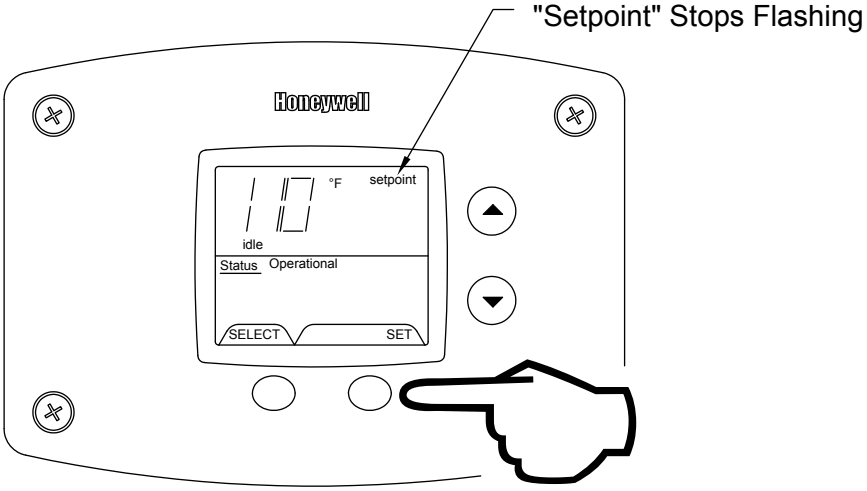

To Display and Change Temperature Format (˚F/˚C):

To Change Temperature Format in Display from ˚F to ˚C or ˚C to ˚F:
Step 1: While in “Service Mode”, press “Select” button until “˚F/˚C” is shown in the upper right portion of the water heater display.

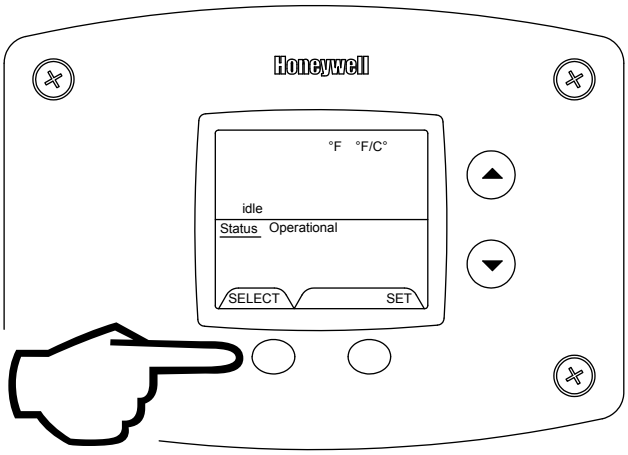

Step 2: Press “Set” button to change temperature format. “˚F/˚C” symbol will flash in the water heater display.

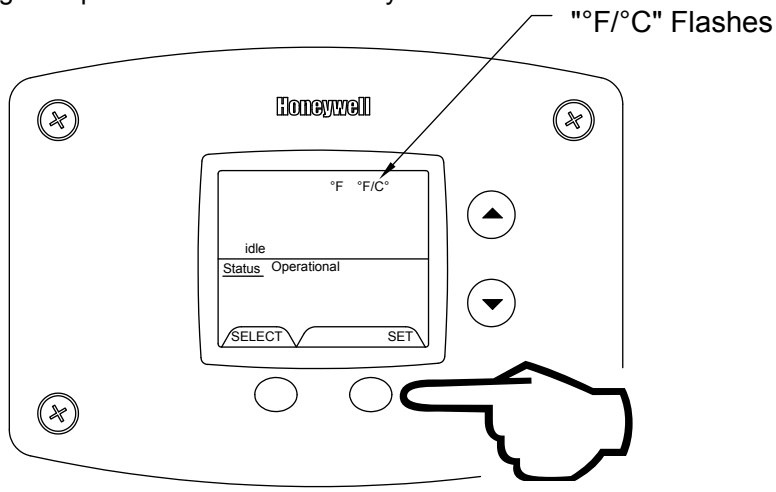

Step 3a: Press “Temperature Up” button to change temperature format to ˚C.

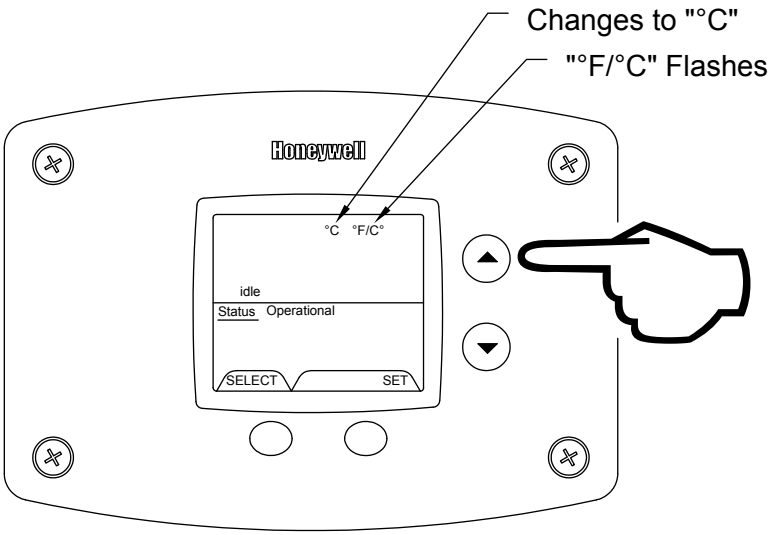

Step 3b: Press “Temperature Down” button to change temperature format to ˚F.

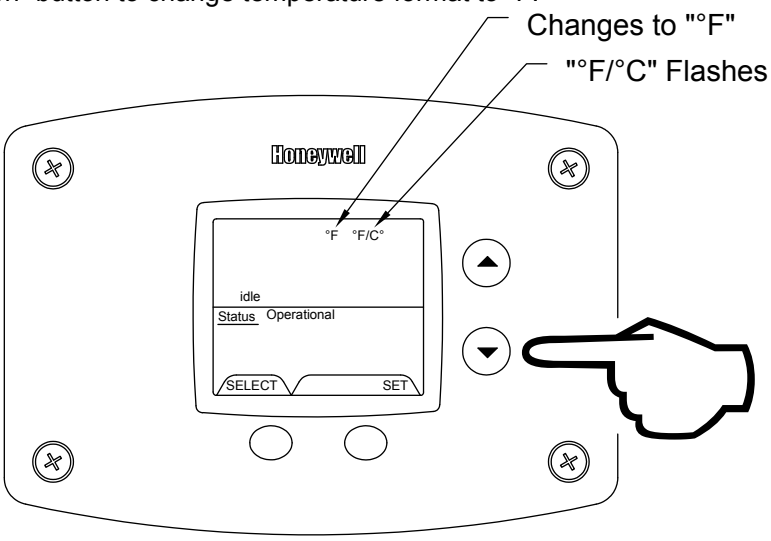

Step 4: Press “Set” button to confirm ˚F or ˚C format. ˚F/˚C will stop flashing.

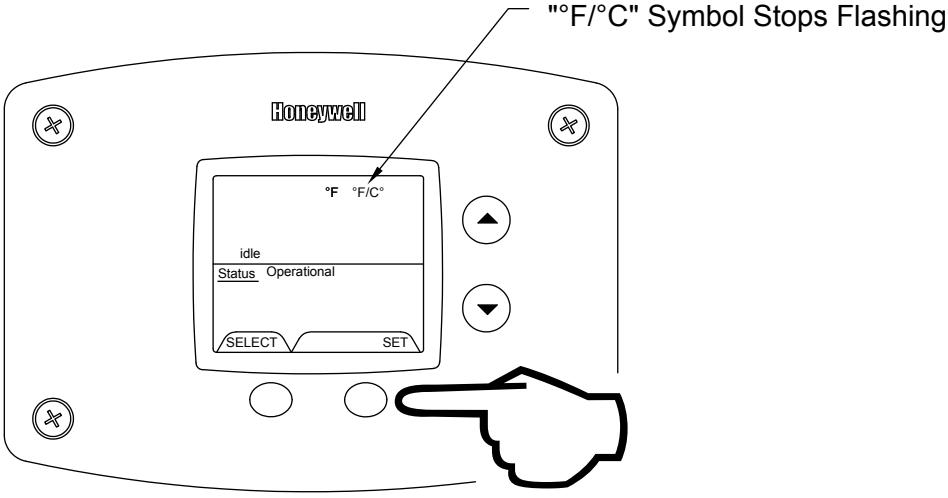

Step 5: Pressing “Select” button will return display to setpoint in format selected (˚F or ˚C) immediately.

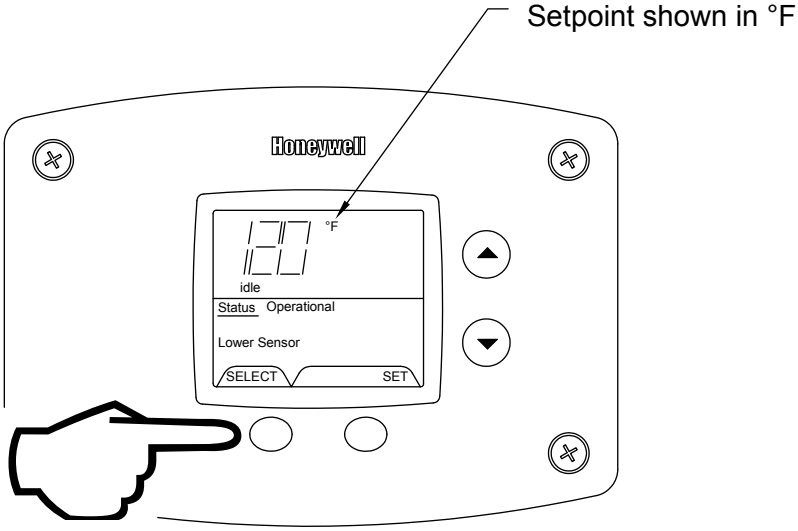

How to reset the control from Lockout Conditions:

⚠ WARNING

The following procedure is for service and installation personnel only. Resetting lockout conditions without correcting the malfunction can result in a hazardous condition.

If an error code is displayed (except for #4, low flame sense current), the water heater will be in a “lockout condition” with the water heater display showing the error code number and “Service Needed” in the status section of the display window. Error codes 62 (maximum number of retries detected) and 63 (maximum number if ignition recycles detected) are “Soft Lockouts” in which the control can be reset in the “User Mode” by pressing the lower right button under “Lockout Reset” shown in the lower right portion of the display. The control will also go through 3 attempts to relight the burners every hour in the soft lockout condition.

Resetting Error Codes in Soft Lockout Condition

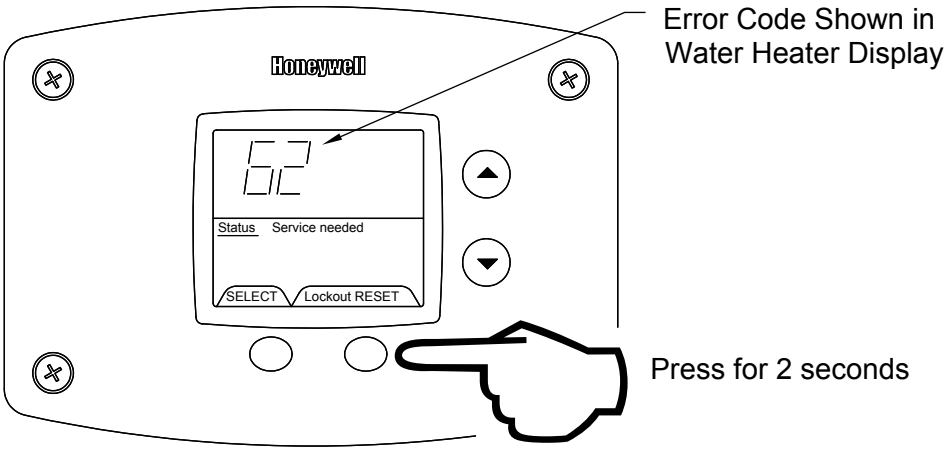

All other error codes will put the water heater into a “Hard Lockout” condition, in which the water heater will not operate and cannot be reset in the “User Mode”. To reset a hard lockout, first enter the “Service Mode” described earlier by pressing both the “Temperature Up” and “Select Buttons” at the same time for 3 seconds. Then press the lower right button under “Lockout Reset” in the water heater display and hold for 3 seconds.

Resetting Error Codes in Hard Lockout Condition

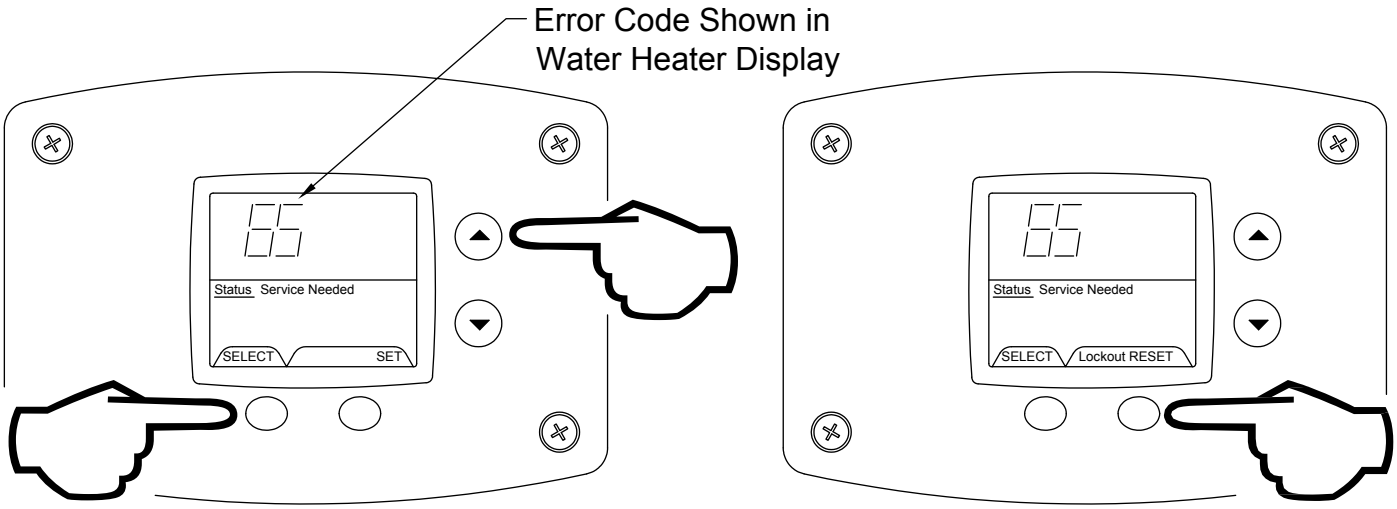

Step 1: Press for 3 seconds to enter service mode.

Step 2: Press for 3 seconds to reset control in service mode.

Error Codes and Error History Display:

If there is an operating problem with the water heater, an error code number will appear on the water heater display with "Service Needed" to the right of the "Status" indicator. The error code label is located below the water heater display and the following section in this Installation and Operating Instruction Manual explains the error codes with corrective actions to repair the water heater.

Example of Error Code in the Display:

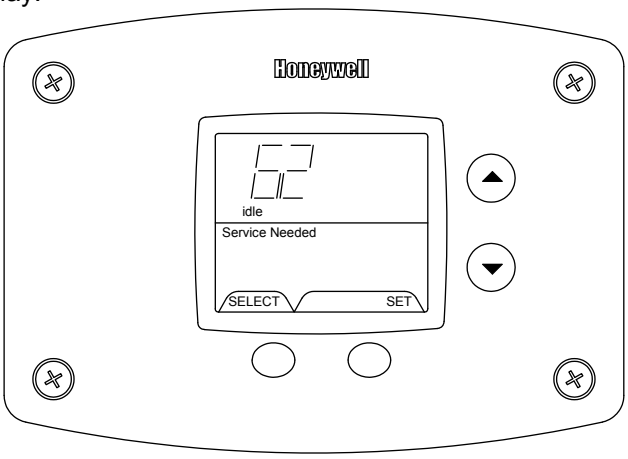

Error Code History:

In "Service Mode" pressing the "Select" button after the "Software Version" (item 8 in the previously described sequence of service modes) will show an error code history, if there have been any previous operating problems with the water heater. If the display shows --, there is not a current error code.
The Water Heater Display will provide up to 10 previous error codes. The oldest error code will be stored in code index #1 and the most recent in code index #10 (if there are 10 error codes).

To view previous error codes:

Step 1:
In "Service Mode" press the "Select" button until the next display after the "Software Version". If there are no current error codes, the display will show -- .

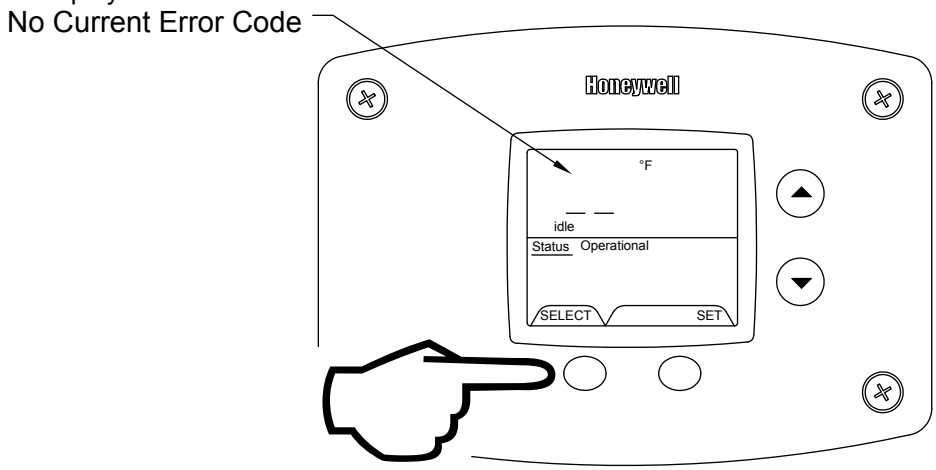

Step 2:
Press the “Temperature Down” button to select the error code index, starting with the most recent error code “10”.

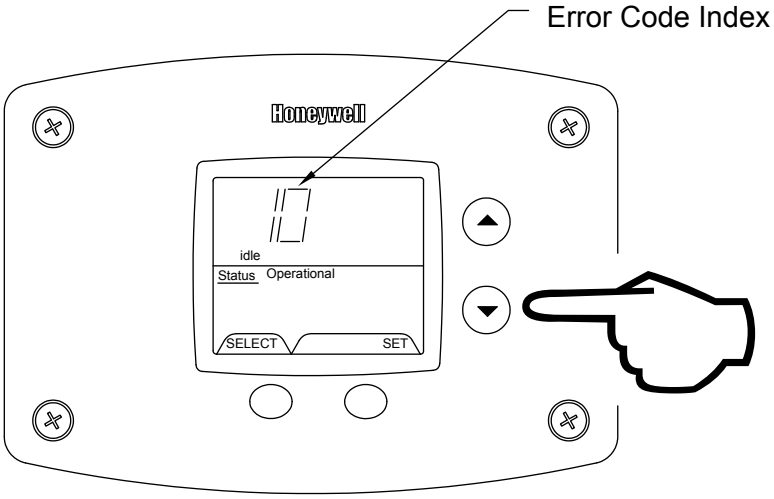

Step 3:
Press the “Select” button to view the error code for “code 10”. If there is a number displayed, note what the number is. The label next to the water heater display will identify the code number. If no number is displayed with only a “--“ in the water heater display, then there has not been an error code for error code index 10.

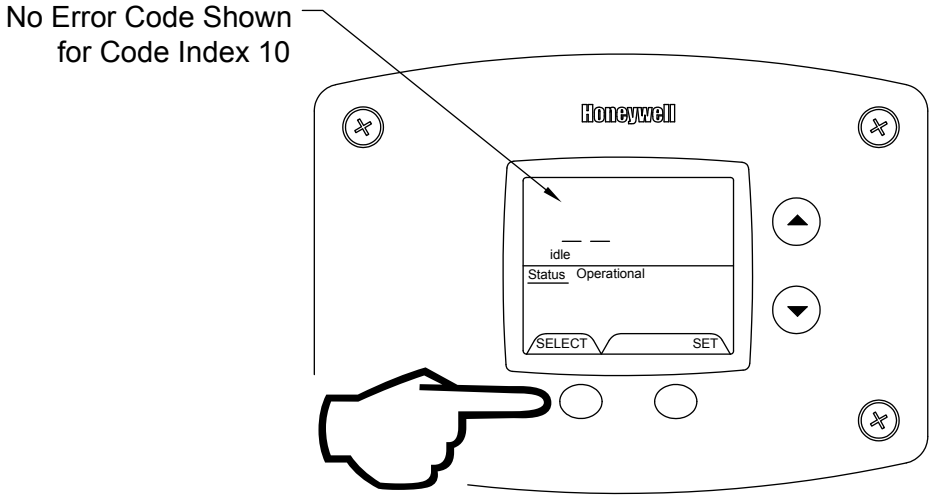

Step 4:
Press the “Temperature Down” button to change to the previous code index, code #9.

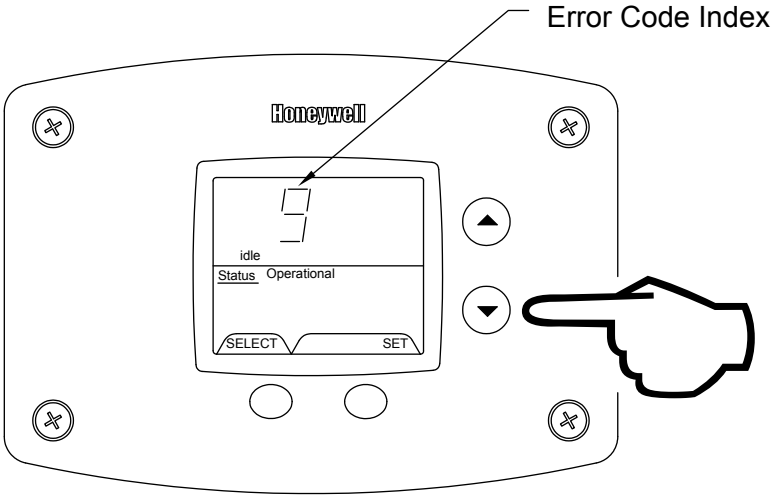

Step 5:
Press the “Select” button for code index #9 to view if there are any code numbers.

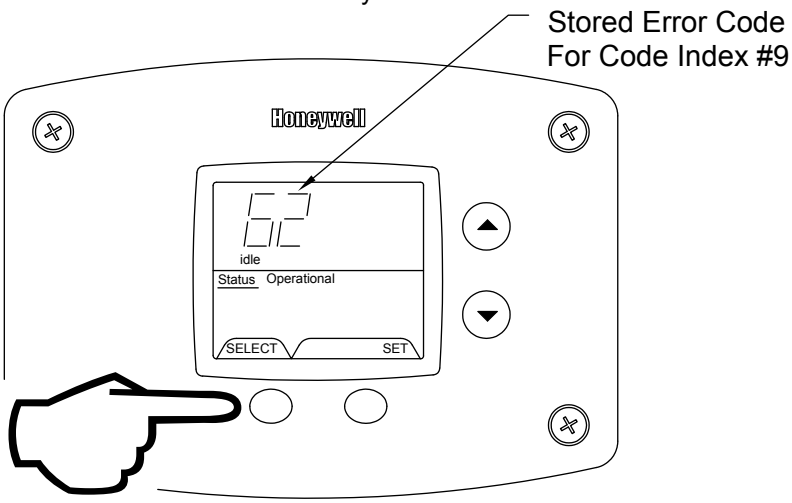

Step 6:
Continue pressing the “Temperature Down” button to change to the next error code index and press “Select” to view the error code number, if any, for that index number. Continue on to index #1, the oldest error code index. The water heater display will store up to 10 error codes with the oldest code starting in code index #1 with the most recent code in code index #10.

Step 7: 10 seconds after the last button press, the Water Heater Display will revert back to the current error code display. To exit Service Mode, either wait 30 seconds or press Temperature Up button and Select Button for 3 seconds.

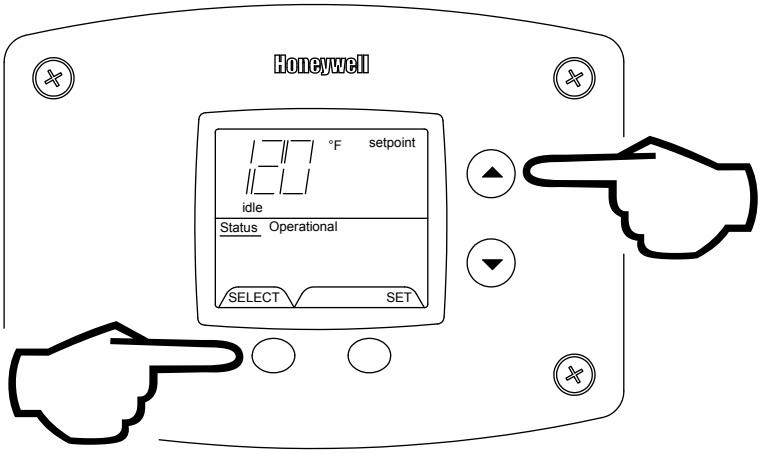

Exiting Service Mode

DIAGNOSTIC ERROR CODES AND TROUBLESHOOTING PROCEDURES FOR HONEYWELL INTEGRATED CONTROLS (24 VOLT FLUE DAMPER MODEL SERIES)

Error Code	Definition of Code	Cause of Problem and Actions Taken to Correct
4	Low Flame Sense Current	Determine flame sense current in the Service Mode with the water heater operating. If less than 1.0 microamps, check pilot flame sense rod and wire. Clean flame sense rod with emery cloth. If problem is not solved, replace pilot.
55	Damper End Switch Failed to Close (Stuck Open)	Check to see if flue damper has fully opened. If not, disconnect damper harness at damper plug connection and check for 24 volts between pins on red and white wires. If no voltage, check wire harness or measure output on control board (pins 1&4). If there is no voltage at the control board, replace control. Replace wire harness if voltage does not pass to the pin terminals from the control. If there is 24 volts at flue damper connection, replace flue damper. If damper is open, disconnect harness and check continuity between pins from black and yellow wires on flue damper. If no continuity, replace flue damper.
56	Damper End Switch Failed to Open (Stuck Closed)	Check to see if flue damper has fully closed. If not, disconnect damper harness at damper plug connection and check for 24 volts between pins on red and white wires. If no voltage, check wire harness or measure voltage output on control board (pins 1&4). If there is no voltage at the control board, replace control. Replace wire harness if voltage does not pass to the pin terminals from the control. If there is 24 volts at flue damper connection, replace flue damper. If damper is closed, disconnect harness and check continuity between pins from black and yellow wires on flue damper. If there is continuity, the end switch is stuck closed. Replace flue damper.

Error Code	Definition of Code	Cause of Problem and Actions Taken to Correct
6	Flame Sensed Out of Normal Sequence (Before Opening Gas Valve or After Closing Gas Valve)	Check to make sure gas valve has closed. No voltage should be present at the gas valve before or after ignition cycle. Make sure wire positions on the wire harness are correct. If gas valve is stuck open, replace.
23	Flame Detected Before Ignition	Check to make sure gas valve has closed. No voltage should be present at the gas valve before the ignition cycle. Make sure wire positions on the wire harness are correct. If gas valve is stuck open, replace.
24	Flame Detected After Heating Cycle Completes	Check to make sure gas valve has closed. No voltage should be present at the gas valve before the ignition cycle. Make sure wire positions on the wire harness are correct. If gas valve is stuck open, replace.
31	Upper Sensor Readings Faulty	Resistance of upper sensor out of operating range. Check continuity of wire harness to upper sensor, and if O.K., replace upper sensor.
32	Lower Sensor Readings Faulty	Resistance of lower sensor out of operating range. Check continuity of wire harness to lower sensor, and if O.K., replace lower sensor.
57	Flame Rod Shorted to Ground	Pilot flame sensor rod is shorted to ground. Check to see if flame sensor wire has bare spots touching metal parts of if flame sensor rod is touching the pilot shield or other metal parts. Replace pilot if flame sense wire is damaged or flame rod is bent.
58	AC Line Frequency Error – Signal Too Noisy or Frequency Incorrect	Check line voltage frequency to the water heater. Determine if there are wide fluctuations. Call an electrician if the problem persists. The water heater should be on a separate line.
59	Line Voltage Too Low or High	Check line voltage to the water heater. Determine cause of low or high voltage. Call an electrician or your utility. The water heater should be on a separate line.
61	DC Output Voltage Unstable	Check line voltage to the water heater for erratic readings. Also check wiring to make sure there are no shorts. If power supply and wiring is O.K., replace control board.
62	Maximum Number of Retries Detected	Pilot is either not lighting or not staying lit during the ignition cycle. Check inlet gas pressure for minimum pressure on rating label. Is pilot electrode sparking? Check gas valve wire harness for broken wires or shorts. If 24 volts is present between PV and PV/MV terminals at the gas valve, replace gas valve. Check for voltage output to the yellow and red gas valve wires on the control board pins. If during the ignition trial period, there is no voltage present at the control board pin terminal for the red and yellow wires leading to the gas valve, then replace the control board. Replace pilot if wires are damaged or electrode is damaged.
63	Maximum Number of Ignition Recycles Detected	Pilot flame is lost during run cycle, then reestablished on ignition cycle. Check inlet gas pressure. Is gas pressure dropping below the minimum operating pressure on the rating label after the main gas valve opens? Is the gas pipe size to the water heater adequate? Check the pilot shield position and condition of the burners. Clean or replace as needed. Check the pilot flame and observe the microamp output on the run cycle. Check the pilot tubing to the pilot and replace if crimped or damaged. Replace pilot if wires, flame sensor, or electrode is damaged.
64	Electronics Failure	Replace control board.
65	High Water Temperature (Over 200˚F)	Water temperature in tank has exceeded 200˚F. Check lower sensor. Make sure sensor is fully inserted into the well (clip on sensor wire secures sensor in place). Check lower and upper (where used) sensor readings. If not within specifications, replace sensor. If sensor and wire harnesses check O.K., replace control board.

Procedure for Checking Thermostat Sensors

Set the thermostat above water temperature (See temperature adjustment section) and observe system through one (1) complete cycle. Make sure system operates as desired.

To check the upper sensor or lower sensor assembly, compare the resistance of the sensor terminals (blue leads for upper sensor, yellow and black lead for lower sensor) as measured by an ohmmeter to the water temperature as measured by an accurate thermometer. Thermistor resistance increases as the temperature decreases. The tables below show the correct sensor resistance at various temperatures. Replace the sensor if the ohm reading in the chart does not approximate the reading from the sensor at the temperature measured in the tank.

In Degrees F										
°F	0	1	2	3	4	5	6	7	8	9
40	26109	25400	24712	24045	23399	22771	22163	21573	21000	20445
50	19906	19383	18876	18383	17905	17440	16990	16553	16128	15715
60	15314	14925	14548	14180	13823	13477	13140	12812	12494	12185
70	11884	11592	11308	11032	10763	10502	10248	10000	9760	9526
80	9299	9078	8862	8653	8449	8250	8057	7869	7685	7507
90	7333	7165	7000	6839	6683	6531	6383	6238	6098	5961
100	5827	5697	5570	5446	5326	5208	5094	4982	4873	4767
110	4663	4562	4464	4368	4274	4183	4094	4006	3922	3839
120	3758	3679	3602	3527	3453	3382	3312	3244	3177	3112
130	3048	2986	2925	2866	2808	2752	3697	3643	2590	2538
140	2488	2439	2391	2344	2298	2253	2209	2166	2124	2083
150	2043	2004	1966	1928	1891	1856	1820	1786	1753	1720
160	1688	1656	1625	1595	1566	1567	1509	1481	1454	1427
170	1402	1376	1351	1327	1303	1280	1257	1235	1213	1191
180	1170	1150	1129	1110	1090	1071	1053	1035	1017	999
190	982	965	949	933	917	901	886	871	857	842
200	828	814	801	788	775	762	749	737	725	713

In Degrees C										
°C	0	1	2	3	4	5	6	7	8	9
0	32648	31026	29495	28049	26682	25389	24166	23010	21915	20879
10	19898	18968	18088	17253	16461	15710	14998	14322	13680	13071
20	12492	11942	11419	10922	10450	10000	9572	9165	8778	8409
30	8057	7722	7403	7099	6808	8532	6268	6016	5775	5546
40	5327	5117	4917	4726	4543	4368	4201	4042	3889	3742
50	3602	3468	3340	3217	3099	2986	2878	2774	2675	2579
60	2488	2400	2316	2235	2157	2083	2011	1942	1876	1813
70	1752	1693	1637	1582	1530	1480	1432	1385	1340	1297
80	1256	1216	1177	1140	1105	1070	1037	1005	974	944
90	916	888	861	835	810	786	763	741	719	698

SECTION XII: PARTS LIST

REPLACEMENT PARTS LISTS

Contact your supplier, plumbing professional or the company listed on the rating plate of the water heater for replacement parts.

Provide the part name as well as the model and serial number(s) of the water heater(s) when ordering parts. When applicable, the following information must be provided: type of gas, voltage and amperage, item number (from the following list) and description (from the following list).

Standing Pilot Parts List
* Denotes emergency shut-off devices.

PART NAME AND DESCRIPTION
1. Drafthood
2. Diptube
3. Flue Baffle
4. Cleanout Access (Jacket) Cover
5. Drain Valve
6. Cleanout Cover
6a. Cleanout Cover O-Ring (Not Pictured)
6b. Cleanout Cover Gasket A.S.M.E. (Not Pic)
7. Heat Shield
8. Main Burner Tube(s)
9. Burner Tray
10. Pilot Burner Assembly
11. Pilot Supply Tube
12. Main Burner Manifold
13. Gas Valve *
14. Main Burner Orifice
15. Pilot Shield
16. Utility Cover
17. Anode Rod
18. Tank Leg Thermal Break
19. Wire Harness
20. T&P Valve
21. Outlet Nipple
22. Collector Head
23. Thermostat *

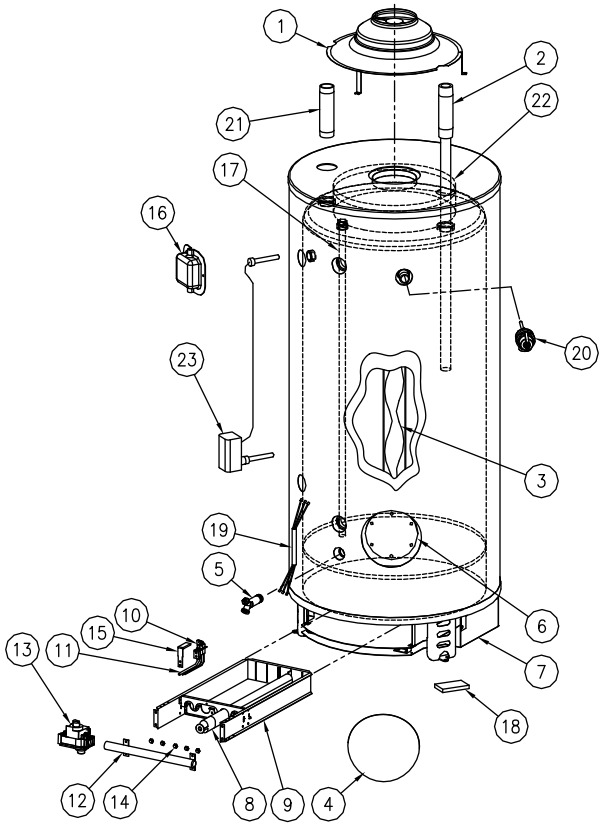

Spark To Pilot Ignition Parts List.
* Denotes emergency shut-off devices.

PART NAME AND DESCRIPTION	
1. Drafthood	17. Integrated Control Board
2. Diptube	18. Pilot Shield
3. Flue Baffle	19. Control Box
4. Cleanout Access (Jacket) Cover	20. Power Switch
5. Drain Valve	21. Utility Cover
6. Cleanout Cover	22. Wire Harness-Damper/ Upper Sensor
6a. Cleanout Cover O-Ring (Not Pictured)	23. Flue Damper
6b. Cleanout Cover Gasket A.S.M.E. (Not Pic)	24. Anode Rod
7. Heat Shield	25. Tank Leg Thermal Break
8. Main Burner Tube(s)	26. Lower Temp Sensor
9. Burner Tray	27. Wire Harness-Lower Sensor
10. Pilot Burner Assembly	28. T&P Valve
11. Pilot Supply Tube	29. Nylon Cable Clamp
12. Main Burner Manifold	30. Self Tapping Screw
13. Gas Valve *	31. Control display *
14. Main Burner Orifice	32. Upper Temp Sensor
15. Control Box Cover	33. Outlet Nipple
16. Transformer	34. Collector Head

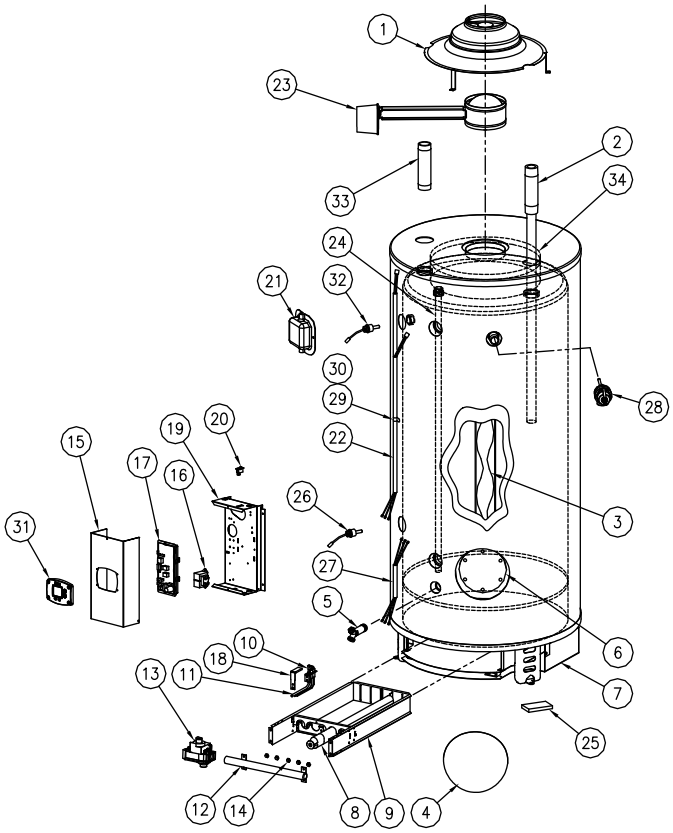

SECTION XIII: INSTALLATION FOR POTABLE WATER AND SPACE HEATING

THE FOLLOWING INSTRUCTIONS ARE FOR INSTALLATION OF:
GAS WATER HEATERS SUITABLE FOR WATER (POTABLE) HEATING AND SPACE HEATING

1. All piping components connected to this water heater for space heating applications must be suitable for use with potable water. In Massachusetts, space heating piping length **must not** exceed 50 feet.
2. Toxic chemicals, such as those used for boiler treatment, **must not** be introduced into potable water used for space heating.
3. This water heater **must not** be connected to an existing heating system or component(s) previously used with a non-potable water heating appliance.
4. When the system requires water for space heating at temperatures higher than required for other means, such as an ASSE approved mixing valve must be installed to temper the water for those uses in order to reduce the scald hazard potential.

Please refer to the illustrations below and on the following pages for suggested piping arrangements.

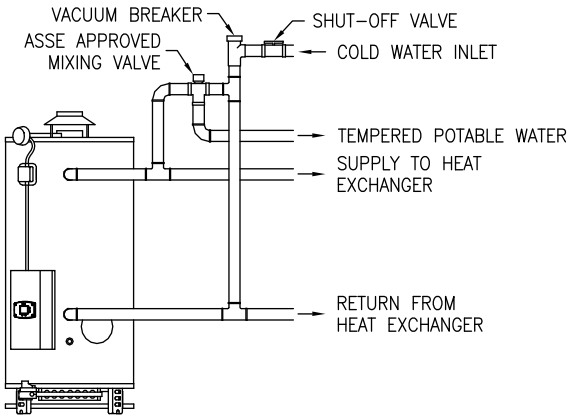

Suggested Piping Arrangement for Side Connections

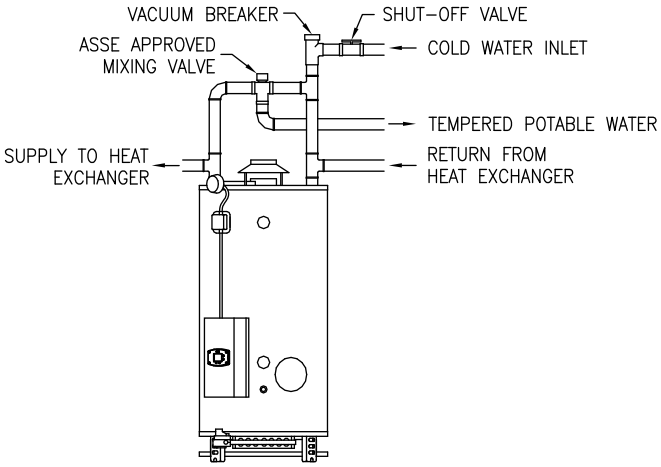

Suggested Piping Arrangement for Top Connections

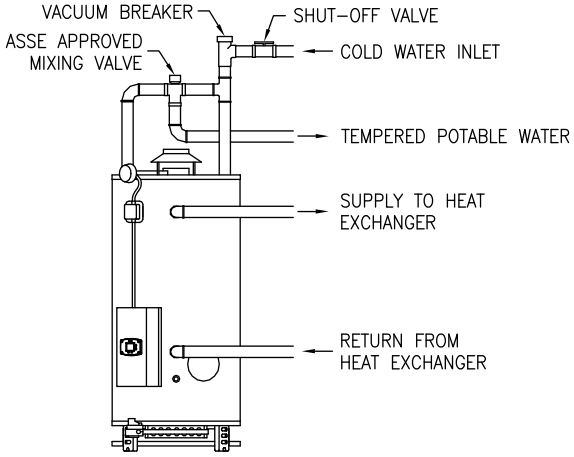

Suggested Piping Arrangement for Side Connections (If Applicable)

SECTION XIV: NOTES