ULTRA HIGH EFFICIENCY COMMERCIAL GAS WATER HEATER

⚠ WARNING: If the information in these instructions is not followed exactly, a fire or explosion may result causing property damage, personal injury or death

- **Do not store or use gasoline or other flammable vapors and liquids in the vicinity of this or any other appliance**

- **WHAT TO DO IF YOU SMELL GAS**
  - **Do not try to light any appliance.**
  - **Do not touch any electrical switch; do not use any phone in your building.**
  - **Immediately call your gas supplier from a neighbor's phone. Follow the gas supplier's instructions.**
  - **If you cannot reach your gas supplier, call the fire department.**

- **For your family's comfort, safety and convenience, it is recommended this water heater be installed and serviced by a plumbing professional.**

AHRI CERTIFIED® www.ahridirectory.org

DESIGN CERTIFIED

INSTALLATION/OPERATING MANUAL

WITH TROUBLESHOOTING GUIDE

PLACE THESE INSTRUCTIONS ADJACENT TO HEATER AND NOTIFY OWNER TO KEEP FOR FUTURE REFERENCE

238-44727-00N 7/14

SECTION I: IMPORTANT INFORMATION

READ CAREFULLY

This gas-fired water heater is design certified by CSA International under the American National Standard, Z21.10.3 (as indicated on the rating plate) and CAN/CGA 4.3-M (as indicated on the rating plate) available from CSA Standards Association, 178 Rexdale Blvd., Etobicoke, Ontario, Canada M9W 1R3.

This water heater must be installed in accordance with local codes. In the absence of local codes, it must be installed in compliance with the National Fuel Gas Code (ANSI Z223.1-Latest Edition), or in Canada CAN/CGA B149.1 Natural Gas Installation Code (Latest Edition) or CAN/CGA B149.2 Propane Installation Code (Latest Edition).

The following terms are used throughout this manual to bring attention to the presence of hazards at various risk levels, or to important information concerning product life.

⚠ DANGER

Indicates an imminently hazardous situation, which, if not avoided, will result in death, serious injury or substantial property damage.

⚠ CAUTION

Indicates potentially hazardous situation, which, if not avoided, may result in moderate or minor injury or property damage.

⚠ WARNING

Indicates a potentially hazardous situation, which, if not avoided, could result in death, serious injury or substantial property damage.

NOTICE

Indicates special instructions on installation, operation or maintenance, which are important but not related to personal injury hazards.

NOTICE

This water heater has a limited warranty. The warranty for this water heater is valid only if the water heater has been installed, maintained and operated in accordance with these instructions.

TABLE OF CONTENTS

I IMPORTANT INFORMATION 2
II SPECIFICATIONS..... 5
III GENERAL INFORMATION..... 6
IV INSTALLATION INSTRUCTIONS..... 9
V WATER CONNECTIONS..... 15
VI VENTING 17
VII GAS CONNECTIONS 37
VIII ELECTRICAL CONNECTIONS 39
IX OPERATING INSTRUCTIONS 40
X MAINTENANCE 43
XI TROUBLE SHOOTING GUIDE 47
XII PARTS LIST..... 48
XIII NOTES..... 51

⚠ DANGER

DO NOT store or use gasoline or other flammable, combustible, or corrosive vapors and/or liquids in the vicinity of this or any other appliance.

DO NOT install any damaged venting system components. If damage is evident then please contact the supplier where the water heater was purchased or the manufacturer listed on the rating plate for replacement parts.

Use only vent terminals provided or factory authorized terminals for venting this water heater.

This water heater is equipped with an adjustable thermostat to control water temperature. Hot water temperatures required for automatic dishwasher and laundry use can cause scald burns resulting in serious personal injury and/or death. The temperature at which injury occurs varies with the person's age and the time of exposure. The slower response time of disabled persons increases the hazards to them. *NEVER* allow small children to use a hot water tap, or to draw their own bath water. *NEVER* leave a child or disabled person unattended in a bathtub or shower.

Failure to properly install the vent and air intake (if applicable) system could result in property damage, personal injury, or death

⚠ WARNING

Improper installation, adjustments, alteration, service or maintenance can cause property damage, personal injury or loss of life. Failure to follow all instructions in the proper order can cause personal injury or death. Read and understand all instructions, including all those provided with the appliance before installing, starting-up, operating, maintaining or servicing this appliance. Keep this manual and literature in legible condition with this water heater for reference by owner and service technician.

This water heater requires regular maintenance and service to operate safely. Follow the instructions contained in this manual.

Installation, maintenance, and service must be performed only by a qualified, skilled and knowledgeable installer or service provider.

Installation is not complete unless a temperature and pressure relief valve is installed into the proper location at the top of this water heater.

It is the responsibility of the installing contractor to see that all controls are correctly installed and are properly operating when the installation is complete.

This water heater is suitable for installation on combustible flooring. Do not install water heater on carpeting.

DO NOT operate this water heater without first being certain it is filled with water.

DO NOT tamper with or alter the water heater and/or controls.

DO NOT operate water heater with jumpered or absent controls or safety devices.

DO NOT operate water heater if any external part has been under water. Immediately call a qualified service agency to inspect the appliance and to replace any part of the control system including gas controls, which has been under water.

DO NOT attempt to use this water heater with any gas other than the type listed on the rating plate. Do not attempt to convert this water heater for use with a gas other than the type for which it is equipped. Failure to use the proper gas can create an unsafe condition resulting in property damage, bodily injury, or death. Consult your local gas supplier or gas company if there are any questions.

DO NOT operate this water heater if the input rate exceeds the rate shown on the water heater rating plate.

This water heater contains very hot water under high pressure. Do not unscrew any pipe fittings nor attempt to disconnect any components of this water heater without positively assuring the water is cool and is not under pressure. Always wear protective clothing and equipment when installing, starting up or servicing this water heater to prevent scald injuries. Do not rely on the temperature gauges to determine the temperature. Do not touch any components unless they are cool.

This water heater must be properly vented and connected to an approved vent system in good condition. DO NOT operate water heater with the absence of an approved vent system. A clean and unobstructed vent system is necessary to allow noxious fumes that could cause injury or loss of life to vent safely and will contribute toward maintaining the water heater's efficiency.

⚠ WARNING

Prior to connecting the gas supply line to a gas fired water heater, ensure that the gas supply line does not have moisture/water or dirt/scale inside the gas line. Commonly this check is done at the lowest point in the gas distribution system prior to gas burning appliances.

Do not use this appliance if any external part to the tank has been submerged in water. You should contact a qualified service technician to inspect the appliance and to replace any part of the control system including the combination gas control which has been submerged in water. See the Gas Connections section of this manual before servicing or replacing a water heater that has had any external part to the tank submerged in water.

⚠ WARNING

This water heater needs fresh air for safe operation and must be installed so there are provisions for adequate combustion and ventilation air. Insufficient air supply will cause a recirculation of combustion products resulting in contamination that may be hazardous to life. This will result in carboning or sooting of the combustion chamber, burners, and flue tubes and creates a risk of asphyxiation.

This water heater requires its own separate venting system. DO NOT connect the exhaust vent into an existing vent pipe or chimney.

Water heater materials of construction, products of combustion and the fuel contain carbon monoxide, nitrogen oxides, aldehydes and/or other toxic or harmful substances which can cause death or serious injury and which are known to the state of California to cause cancer, birth defects and other reproductive harm. Always use proper safety clothing, respirators and equipment when servicing or working nearby this water heater.

Flammable items, pressurized containers or any other potential fire hazardous articles must never be placed on or adjacent to the water heater. Open containers of flammable material should not be stored or used in the same room with this water heater.

Insulation blankets are not required for this water heater. This water heater meets or exceeds the ASHRAE/IES 90.1b (latest edition) standards with respect to insulation and standby loss requirements.

Hydrogen gas can be produced in an operating water heater that has not had water drawn from the tank for a long period of time (generally two weeks or more). Hydrogen gas is extremely flammable. To prevent the possibility of injury under these conditions, we recommend the hot water faucet to be open for several minutes at the kitchen sink before you use any electrical appliance, which is connect to the hot water system. If hydrogen is present, there will be unusual sounds such as air escaping through the pipes as hot water begins to flow. Do not smoke or have open flame near the faucet at the time it is open.

⚠ WARNING

Liquefied petroleum gases/propane gas is heavier than air and will remain at floor level if there is a leak. Basements, crawl spaces, closets and areas below ground level will serve as pockets for accumulation of leaking gas. Before lighting, smell all around the appliance area for gas. Be sure to smell next to the floor.

IF YOU SMELL GAS:

- DO NOT try to light any appliance.
- DO NOT touch any electric switch; do not use any telephone in your building.
- Immediately call your gas supplier from a telephone in another building. Follow the gas supplier's instructions.
- If you cannot reach your gas supplier, call the fire department.

To comply with NSF requirements this water heater is to be:

a) Sealed to the floor with sealant, in a smooth and easily cleanable way, or
b) Installed with an optional leg kit that includes legs and/or extensions that provide a minimum clearance of 6 inches *(15.2 cm)* beneath the water heater.

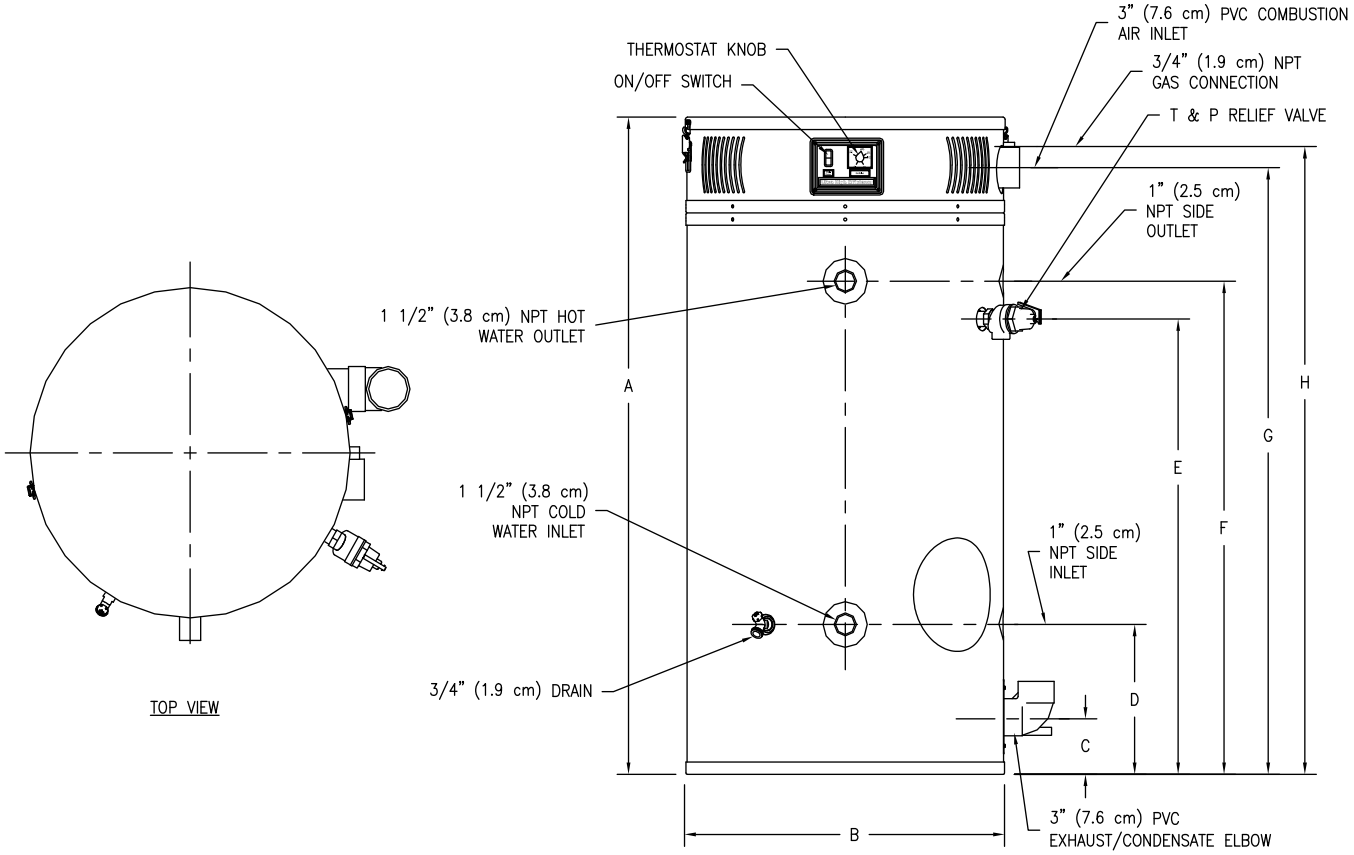

Figure 1. Dimensional Layout

			Recovery GPH At Degree Rise					DIMENSIONS (INCHES)												
Storage Volume Capacity Gallons	**Input Rate BTU/h**	**1st Hr. Del. Gal. At 100°F Rise**	40°F	100°F	140°F	**Stg. Cap. U.S. Gal.**	**Therm. Eff. %**	A Ht.	B Dia.	C Flr to Vent Outlet	D Flr to Inlet Wtr. Conn	E Flr to T&P Valve Conn	F Fl. to Outlet Wtr. Conn	G Fl. to Air Intake	H Fl. to Gas Conn.	Front Wtr. Conn. Dia.	Space Heating Conn. Dia.	Gas Conn. Dia.	Relief Valve Open.	Shpg. Wt. (LBS)
60	125,000	187	364	145	104	60	95.0	57	28 1/4	5	13	40	42 1/2	52 ½	53 ½	1 ½	1	¾	¾	570
60	150,000	211	423	169	121	60	92.0	57	28 1/4	5	13	40	42 1/2	52 ½	53 ½	1 ½	1	¾	¾	570
60	199,999	265	558	223	159	60	91.0	57	28 1/4	5	13	40	42 1/2	52 ½	53 ½	1 ½	1	¾	¾	570
100	150,000	250	450	180	129	100	98.1	77 5/8	28 1/4	5	13	60	62 ½	73 1/8	74 ¾	1 ½	1	¾	¾	900
100	199,999	309	597	239	171	100	97.5	77 5/8	28 1/4	5	13	60	62 ½	73 1/8	74 ¾	1 ½	1	¾	¾	900
100	250,000	364	735	294	210	100	96.0	77 5/8	28 1/4	5	13	60	62 ½	73 1/8	74 ¾	1 ½	1	¾	1	900
100	300,000	405	836	335	239	100	91.0	77 5/8	28 1/4	5	13	60	62 ½	73 1/8	74 ¾	1 ½	1	¾	1	900
100	399,999	516	1,115	446	319	100	92.0	77 5/8	28 1/4	5	13	60	62 1/2	73 1/8	73 1/4	1 1/2	1	1	1	950

			Recovery LPH At Degree Rise					DIMENSIONS (MILLIMETERS)												
Storage Volume Capacity Gallons	**Input Rate KW**	**1st Hr. Del. LPH at 56°C Rise**	22°C	56°C	78°C	**Stg. Cap. Liter**	**Therm. Eff. %**	A Ht.	B Dia.	C Flr to Vent Outlet	D Flr to Inlet Wtr. Conn	E Flr to T&P Valve Conn	F Fl. to Outlet Wtr. Conn	G Fl. to Air Intake	H Fl. to Gas Conn.	Front Wtr. Conn. Dia.	Space Heating Conn. Dia.	Gas Conn. Dia.	Relief Valve Open.	Shpg. Wt. (KG)
60	36.6	708	1378	549	394	227	95.0	1448	718	127	330	1016	1080	1334	1359	38	25	19	19	259
60	43.9	799	1601	640	458	227	92.0	1448	718	127	330	1016	1080	1334	1359	38	25	19	19	259
60	58.6	1003	2112	844	602	227	91.0	1448	718	127	330	1016	1080	1334	1359	38	25	19	19	259
100	43.9	946	1703	681	488	379	98.1	1972	718	127	330	1524	1588	1857	1899	38	25	19	19	408
100	58.6	1170	2260	905	647	379	97.5	1972	718	127	330	1524	1588	1857	1899	38	25	19	19	408
100	73.2	1378	2782	1113	795	379	96.0	1972	718	127	330	1524	1588	1857	1899	38	25	19	25	408
100	87.9	1533	3165	1268	905	379	91.0	1972	718	127	330	1524	1588	1857	1899	38	25	19	25	408
100	117.2	1,953	4,221	1,688	1,208	379	92.0	1972	718	127	330	1524	1588	1857	1861	38	25	25	25	431

Table 1. Specifications

SECTION III: GENERAL INFORMATION

FEATURES

This water heater contains the following features:

MAIN POWER ON/OFF SWITCH – The front panel of this water heater has a lighted ON/OFF switch, which is illuminated when the main power is turned on to indicate power to the water heater.

COMBUSTION SYSTEM – This water heater is equipped with a self-compensating negative pressure pre-mix combustion system. As the blower operates, air is drawn in through the air intake and into a vent, which pulls gas from the gas valve. The gas and air is then mixed in the combustion blower and sent through the transition tube into the burner. The Hot Surface Ignition System (HSI) then ignites the gas/air fuel mixture to produce flue products (combustion). The flame sensor signals the ignition module (described below), that a flame is present.

IGNITION MODULE – The ignition module provides the timing for the combustion system. A sequence of operation (S-OP) is described in "Section IX: Operating Instruction." As the combustion system progresses through the S-OP, LED's illuminate, allowing accurate trouble-shooting should the need arise. If a failure occurs, the system will "blink" the LED that corresponds to the failure as described in the "Section XI: Troubleshooting Guide."

ADJUSTABLE THERMOSTAT – This water heater is equipped with an adjustable thermostat to control water temperature. Hot water temperatures required for automatic dishwasher and laundry use can cause scald burns resulting in serious personal injury and/or death.

The temperature may be adjusted from about 80°F *(26.6°C)* to about 180°F *(82.2°C)*. The thermostat was adjusted to 120°F before the water heater was shipped from the factory. It is recommended that lower temperatures be used to avoid the risk of scalding. Refer to the "Warnings" and the section on SCALDING in "Section V: Water Connections." It is further recommended, in all cases, that the water temperature be set for the lowest temperature, which satisfies your hot water needs. This will also provide the most energy efficient operation of the water heater and minimizes scale formation.

Setting the water heater temperature at 120°F *(48.9°C)* will reduce the risk of scalds. Some states require setting the specific lower temperatures.

The top immersion well of the single bulb controller also contains the high limit (energy cutoff) sensor. The high limit switch interrupts the main burner gas flow should the water temperature reach approximately 200°F *(93.3°C)*.

Should the high limit switch activate, it must be manually reset. This can be accomplished by turning the main power on/off switch to the off position and then back to the on position and allowing the water temperature of the tank to drop below 160°F *(71.1°C)*.

Contact your qualified installing contractor, service provider or manufacturer listed on the rating plate if continued high limit switch operation occurs.

SERVICE PANEL – The service panel is located behind the service panel access cover, which is located by the exhaust elbow near the bottom of the water heater. This panel contains a differential pressure switch that monitors the pressure across the exhaust orifice. A collector high limit switch is used to monitor the ambient temperature between the first pass collector and the exhaust collector. This is a manually re-settable switch. If this switch continues to trip, please contact an authorized service agency.

LATCHES – The latches allow easy access for servicing the water heater from the top. Simply remove the two latches for servicing and re-latch upon completion. No tools are required to obtain access to the top of the water heater.

TEMPERATURE AND PRESSURE RELIEF VALVE –

⚠ WARNING

Keep clear of the combination temperature and pressure relief valve discharge line outlet. The discharge may be hot enough to cause scald injury. The water is under pressure and may splash.

For protection against excessive temperatures and pressure, install temperature and pressure protective equipment required by local codes, but not less than a combination temperature and pressure relief valve certified by a nationally recognized testing laboratory that maintains periodic inspection of production of listed equipment or materials as meeting the requirements of the Standard for Relief Valves and Automatic Gas Shutoff Devices for Hot Water Supply Systems, ANSI Z21.22 and the Standard CAN1-4.4 Temperature, Pressure, Temperature and Pressure Relief Valves and Vacuum Relief Valves. The combination temperature and pressure relief valve must be marked with a maximum set pressure not to exceed the maximum working pressure of the water heater. The combination temperature and pressure relief valve rating must not be less than the hourly rating of the water heater

Install the combination temperature and pressure relief valve into the opening provided and marked for this purpose on the water heater.

Note: Some models may already be equipped or supplied with an installed combination temperature and pressure relief valve. Verify that the combination temperature and pressure relief valve complies with local codes. If the combination temperature and pressure relief valve does not comply with local codes, replace it with one that does. Follow the installation instructions above on this page

Install a discharge line so that water discharged from the combination temperature and pressure relief valve will exit within 6 inches (15.2 cm) above, or any distance below the structural floor and cannot contact any live electrical part. The discharge line is to be installed to allow for complete drainage of both the combination temperature and pressure relief valve and the discharge line. The discharge opening must not be subjected to blockage or freezing. DO NOT thread, plug or cap the discharge line. It is recommended that a minimum clearance of 4 inches (10.2 cm) be provided on the side of the water heater for servicing and maintenance of the combination temperature and pressure relief valve.

Do not place a valve between the combination temperature and pressure relief valve and the tank!

CONDENSATE DRAIN - The water heater should either be raised several inches above the floor on a concrete slab or use a low profile condensate pump to allow free drainage of condensate from the elbow drain fitting. This water heater is a condensing type unit and requires a drain to be located in close proximity to allow the condensate to drain safely. The condensate drains from the unit at the exhaust elbow located near the bottom of the unit. Using an approved primer and cement (refer to “Venting” section), connect a 3/4" elbow or 3/4" coupling over the outside of the drain outlet and use 3/4" pipe for the drain trap and condensate line to a drain. Make sure the condensate drain line slopes down, away from the water heater at least 1/8" per foot toward the drain. The condensate drain pipe must not be routed through an area subject to below freezing temperatures. The condensate build-up will block the exhaust outlet, which will cause improper operation. Refer to Figure 2 for the proper connection of an elbow to the drain outlet and a condensate trap.

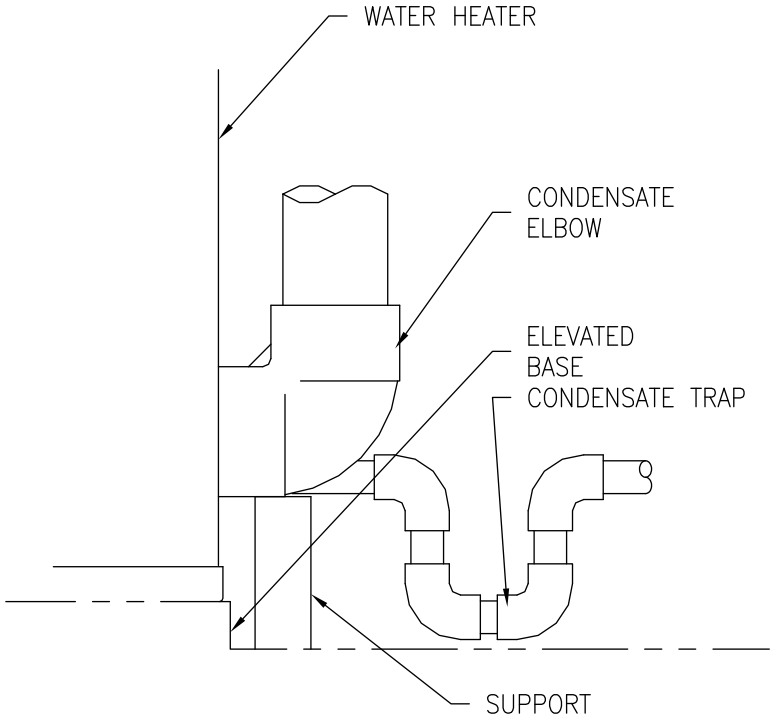

Figure 2. Condensate Elbow with Trap

CLEANOUT – All models are equipped with a cleanout opening to aid in removal of hard water deposits from the tank bottom. If this water heater operates under hard water conditions, the following should be performed at least every 3 months: Turn off water supply and drain the water heater. Remove the cleanout jacket cover and tank cover. When cleaning the tank, care must be taken to avoid trying to break deposits loose as this could damage the glass lining and shorten the life of the water heater. After cleaning, re-install the cleanout tank cover and jacket cover, and refill with water. Refer to the section, "Section X: Maintenance" in this Installation and Operating Instruction manual for the procedures for filling and draining the water heater.

SACRIFICIAL ANODES – Four sacrificial anode rods have been installed in the tank head to extend tank life. The anode rods should be inspected periodically for corrosion and replaced when necessary to prolong tank life. Water conditions in your area will influence the time interval for inspection and replacement of the anode rods. The use of a water softener may increase the speed of anode consumption. More frequent inspection of the anodes is needed when using softened (or phosphate treated) water. Contact the installing contractor, or service provider that installed the water heater or the manufacturer listed on the rating plate for anode replacement information.

POWERED ANODE SYSTEM (399,999 BTU/HR. *(117.2 kw)* MODELS ONLY) – Two powered anodes and one magnesium anode rod are used on models with input ratings of 399,999 Btu/hr *(117.2 kw)*. The powered anode system provides corrosion protection to the tank by supplying a low voltage current to the titanium anode rods and then periodically comparing this current with the potential between the anode rod and tank wall to make corrections. The powered anode system is designed to extend the tank life without requiring anode rod replacement. The powered anode system consists of two titanium powered anode rods located in the front top of the water heater tank and a powered anode control module located on the right side of the control panel. More details on the powered anode system are in "Section X: Maintenance" in this Installation and Operating Instruction Manual.

DISHWASHING MACHINE REQUIREMENTS

All dishwashing machines meeting the National Sanitation Foundation requirements are designed to operate with water flow pressures between 15 pounds per square inch *(103.4 kPa)* and 25 pounds per square inch *(172.4 kPa)*. Flow pressures above 25 pounds per square inch *(172.4 kPa)*, or below 15 pounds per square inch *(103.4 kPa)*, will result in improperly sanitized dishes.

The National Sanitation Foundation also recommends circulation of 180°F *(82.2°C)* water. Where this is done, the circulation should be very gentle so that it does not cause any unnecessary turbulence inside the water heater. The circulation should be just enough to provide 180°F *(82.2°C)* water at the point of take-off to the dishwashing machine. Adjust flow by means of the valve in the circulation line.

SECTION IV: INSTALLATION INSTRUCTIONS

⚠ WARNING

INSTALLATION OF THIS WATER HEATER REQUIRES ABILITY EQUIVALENT TO THAT OF A LICENSED TRADESMAN IN THE FIELD INVOLVED. PLUMBING, AIR SUPPLY, VENTING, GAS SUPPLY AND ELECTRICAL WORK ARE REQUIRED.

DO NOT ATTEMPT TO LIGHT ANY GAS APPLIANCE IF YOU ARE NOT CERTAIN OF THE FOLLOWING:

- Liquefied petroleum gases/propane gas and natural gas have an odorant added by the gas supplier that aids in detection of the gas.
- Most people recognize this odor as a "sulfur" or "rotten egg" smell.
- Other conditions, such as "odorant fade" can cause the odorant to diminish in intensity, or "fade", and not be as readily detectable.
- If you have a diminished sense of smell, or are in any way unsure of the presence of gas, immediately contact your gas supplier from a telephone in another building.
- Gas detectors are available. Contact your gas supplier or plumbing professional for more information.

Liquefied petroleum gases/propane gas is heavier than air and will remain at floor level if there is a leak. Basements, crawl spaces, closets and areas below ground level will serve as pockets for accumulation of leaking gas. Before lighting, smell all around the appliance area for gas. Be sure to smell next to the floor.

IF YOU SMELL GAS:

- Do not try to light any appliance.
- Do not touch any electric switch; do not use any telephone in your building.
- Immediately call your gas supplier from a telephone in another building. Follow the gas supplier's instructions.
- If you cannot reach your gas supplier, call the fire department.

DO NOT OPERATE THE APPLIANCE UNTIL THE LEAKAGE IS CORRECTED!

⚠ WARNING

This water heater must be located in an area where leakage of the tank, water line connections, or the combination temperature and pressure relief valve will not result in damage to the area adjacent to the water heater or to lower floors of the structure. When such locations cannot be avoided, a suitable drain pan must be installed under the water heater. The drain pan depth must be suitable for draining and collecting water, and have a minimum length and width of at least 4 inches *(10.2 cm)* measured from the jacket of the water heater. The drain pan, as described above, can be purchased from your plumbing professional. The drain pan must be piped to an adequate drain. The piping must be at least ¾ inch *(2.0 cm)* in diameter and pitched for proper drainage.

UNPACKING

INSPECT SHIPMENT carefully for any signs of damage.

1. All equipment is carefully manufactured, inspected and packed.
2. Any claims for damage or shortage in shipment must be filed immediately with the manufacturer noted on the rating plate label.
3. Remove all venting components from the combustion assembly compartment by removing the latches.

NOTICE

The vent terminals and the condensate elbow that is supplied with this water heater are stored at the top in the Combustion Assembly Compartment. To access the vent terminals and condensate elbow, unlatch the top lid and remove parts. Be sure to replace the top and relatch.

LOCATE WATER HEATER in front of final position before removing crate.

1. LOCATE so that venting connections will be short and direct.
2. THIS WATER HEATER IS SUITABLE FOR INSTALLATION ON COMBUSTIBLE FLOOR. Do not install this water heater on carpeting.
3. FOR BASEMENT INSTALLATION, provide a solid level elevated base such as concrete or other suitable pad to raise the water heater at least 3 inches *(7.6 cm)* to provide a slope of ⅛ inch *(.3 cm)* to ¼ inch *(.6 cm)* per foot *(.3 m)* for the condensate line to a suitable drain.
4. Minimum clearance to combustible material is 0 inches for the Top, Sides, and Rear of this water heater. However, it is recommended that **at least 18 inches *(45.7 cm)* from the Top, 24 inches *(61 cm)* from the Front, 4 inches *(10.2 cm)* for the Left Side and Rear, and 12 inches *(30.5 cm)* from the Right Side Exhaust Elbow of the water heater be provided for servicing.** Clearance for servicing may be reduced down to minimum clearance to combustible material, but service time and effort may be greatly increased.
5. Increase distances to provide clearance for servicing.

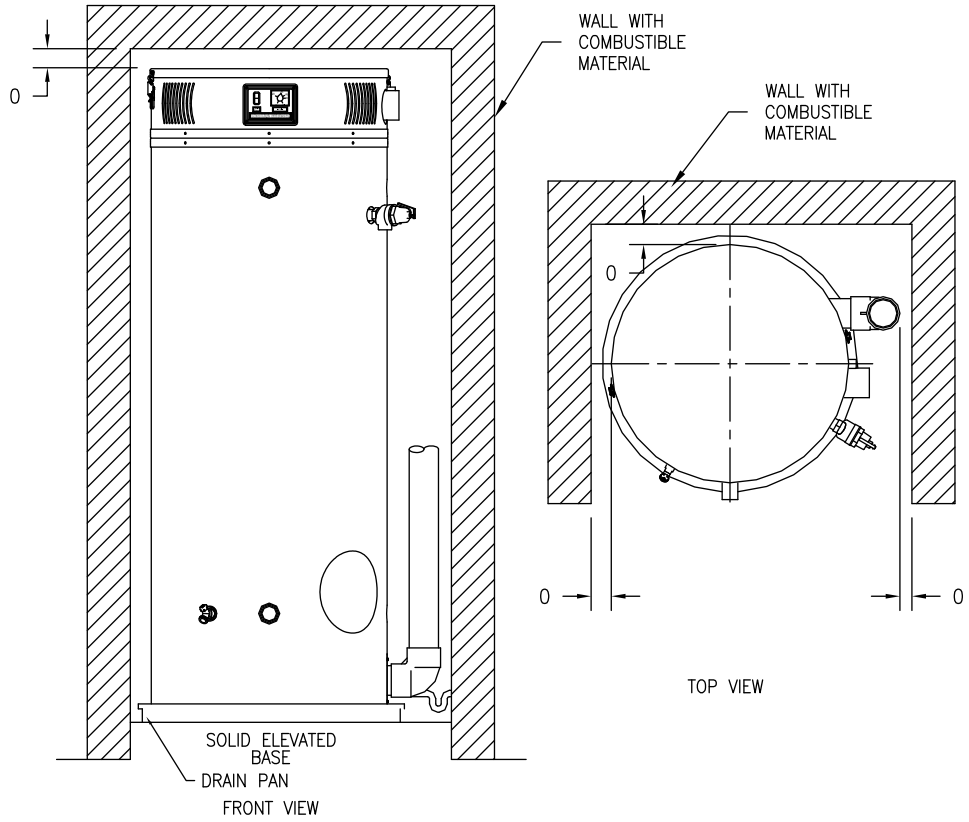

Figure 3a. Minimum Clearance To Combustible Material

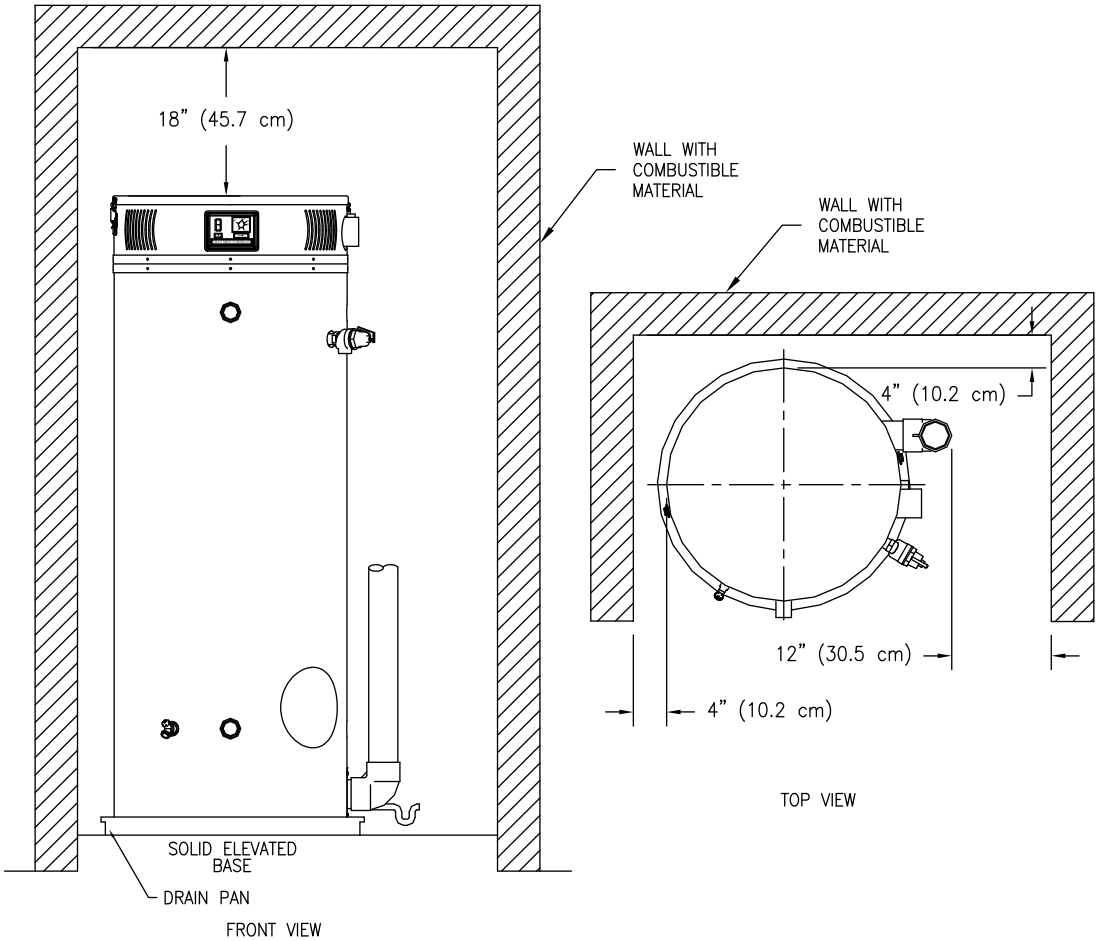

Figure 3b. Recommended Minimum Clearances For Service Access

REMOVE CRATE

1. Remove all banding and pry off crate sides carefully so as not to damage the water heater.
2. Carefully roll/lift the water heater from the crate base.

⚠ CAUTION

Do not drop water heater. Do not bump water heater jacket against floor.

Do not bump exhaust vent pipe against crate or other objects. This will damage the heater and cause it to be inoperable or create nuisance problems.

MOVE WATER HEATER TO PERMANENT POSITION by sliding or walking. Place drain pan underneath water heater

INSTALL TEMPERATURE AND PRESSURE RELIEF VALVE (if not already installed).

⚠ WARNING

Temperature and pressure relief valve discharge piping must be piped near floor to eliminate potential of severe burns. Do not pipe in any area where freezing could occur. Do not install any shut-off valves, plugs or caps to the temperature and pressure relief valve or piping.

⚠ CAUTION

If the building cold water supply has a back-flow preventer, check valve or water meter with check valve, provisions for thermal expansion of water in the hot water system must be provided.

⚠ DANGER

Temperature setting should not exceed safe temperature at fixtures. See Approximate Time/Temperature Scald Chart in "Section V: Water Connections". If higher preheat temperatures are necessary to obtain adequate booster output, add an anti-scald valve for hot water supplied to fixtures.

LOCATION

KEEP APPLIANCE AREA CLEAR AND FREE OF COMBUSTIBLE MATERIALS, GASOLINE AND OTHER FLAMMABLE VAPORS AND LIQUIDS.

This water heater must be located in an area where the general public does not have access to set temperatures.

AIR REQUIREMENTS

1. Do not obstruct the flow of combustion and ventilating air.
2. For safe operation, adequate air is needed for combustion and ventilation. Sooting may result in serious damage to the water heater and risk of fire or explosion. It can also create a risk of asphyxiation. Such a condition often will result in a yellow, luminous burner flame, causing carboning or sooting of the combustion chamber, burner and flue tubes.

MECHANICAL EXHAUSTING OF ROOM AIR

1. Where an exhaust fan is installed in the same room with this water heater and combustion air is drawn from inside the room, sufficient openings for air must be provided in the walls. UNDERSIZED OPENINGS WILL CAUSE AIR TO BE DRAWN INTO THE ROOM THROUGH THE WATER HEATER'S VENTING SYSTEM, CAUSING POOR COMBUSTION THAT MAY BE HAZARDOUS TO LIFE. SOOTING MAY RESULT IN SERIOUS DAMAGE TO THE WATER HEATER AND RISK OF FIRE OR EXPLOSION, WHICH CAN ALSO CREATE A RISK OF ASPHYXIATION. Refer to local codes and /or National Fuel Gas Code for proper air opening sizing.

UNCONFINED SPACE

1. In buildings of conventional frame, brick or stone construction, unconfined spaces may provide adequate air for combustion and ventilation.
2. If the unconfined space is within a building of tight construction (buildings using the following construction: weather stripping, heavy insulation, caulking, vapor barrier, etc.), air for combustion and ventilation must be obtained from outdoors. This may be accomplished by piping air directly to the water heater from outside or providing opening or ducts in the wall. The installation instructions for confined spaces in tightly constructed buildings must be followed to ensure adequate air supply.

CONFINED SPACE

1. When drawing combustion air from inside a conventionally constructed building to a confined space, such a space shall be provided with two permanent openings.
   - The top opening is to be located within 12 inches *(30.5 cm)* of the enclosure top and the bottom opening within 12 inches *(30.5 cm)* of the enclosure bottom.
   - Each opening shall have a free area of at least 1 inch² *(6.5 cm²)* per 1000 Btu/h *(.3 kw)* of the total input of all appliances in the enclosure, but not less than 100 inches² *(645.2 cm²)*.
2. If the confined space is within a building of tight construction, air for combustion and ventilation must be obtained from outdoors. This may be accomplished by piping air directly to the water heater from outside or providing opening or ducts in the wall. When directly communicating with the outdoors through vertical ducts, two permanent openings, located in the above manner, shall be provided.
   - Each opening shall have a free area of not less than 1 inch² *(6.5 cm²)* per 4000 Btu/h *(1.2 kw)* of the total input of all appliances in the enclosure.
   - If horizontal ducts are used, each opening shall have a free area of not less than 1 inch² *(6.5 cm²)* per 2000 Btu/h *(.6 kw)* of the total input of all appliances in the enclosure.

3. If the water heater is installed as a direct vent (outside air piped directly to the water heater), then additional opening, other than the opening for the air intake, are not required. However, adequate ventilation air must be provided in all cases to prevent increased room temperature.

CHEMICAL VAPOR CORROSION

Corrosion of the flue ways and vent system will occur if air for combustion contains certain chemical vapors. Such corrosion may result in poor combustion and create a risk of asphyxiation, as well as reducing the life of the water heater. Spray can propellants, cleaning solvents, refrigerator and air conditioning refrigerants, swimming pool chemicals, calcium and sodium chloride, waxes and process chemicals are corrosive. Products of this sort should not be stored near the water heater or outside by the air intake (if applicable).

TYPICAL INSTALLATION ILLUSTRATION

⚠ CAUTION

If the building cold water supply has a back-flow preventer, check valve or water meter with check valve provisions for thermal expansion of water in the hot water system must be provided.

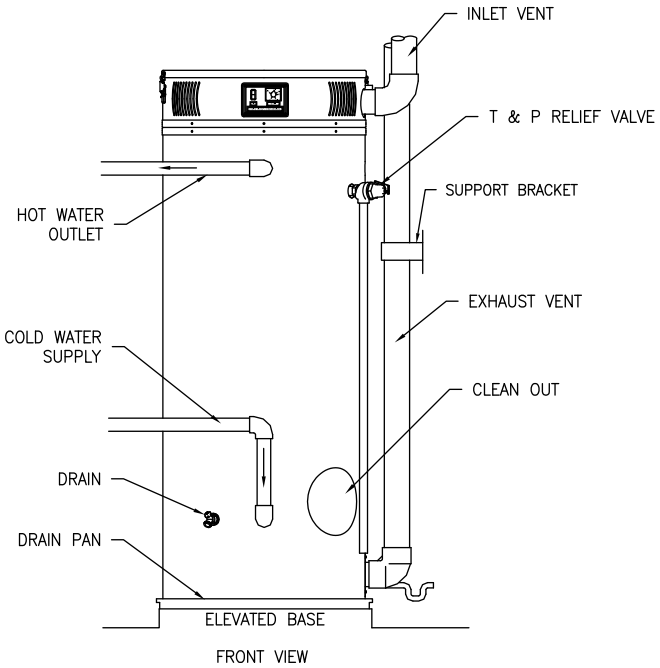

Figure 4. Typical Front Inlet Connection

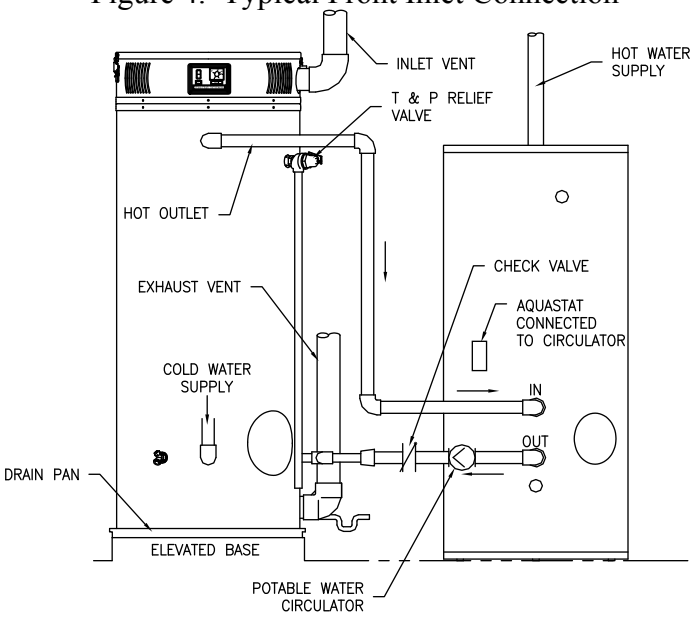

Figure 5. Typical Front Inlet Connect with Storage Heater

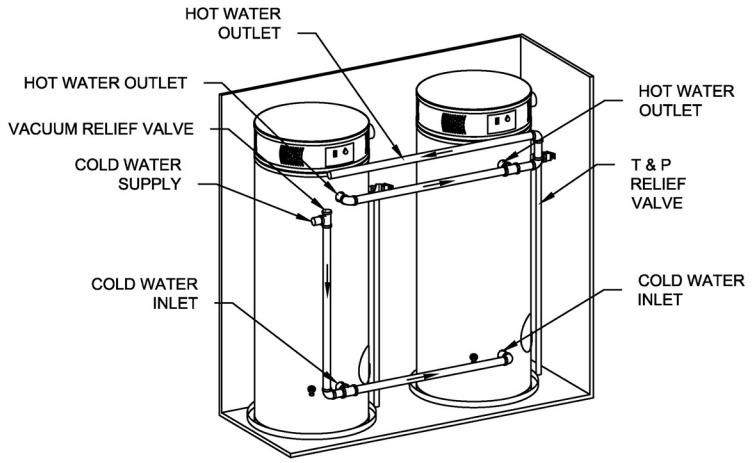

Figure 6. Typical Two Water Heater Connection

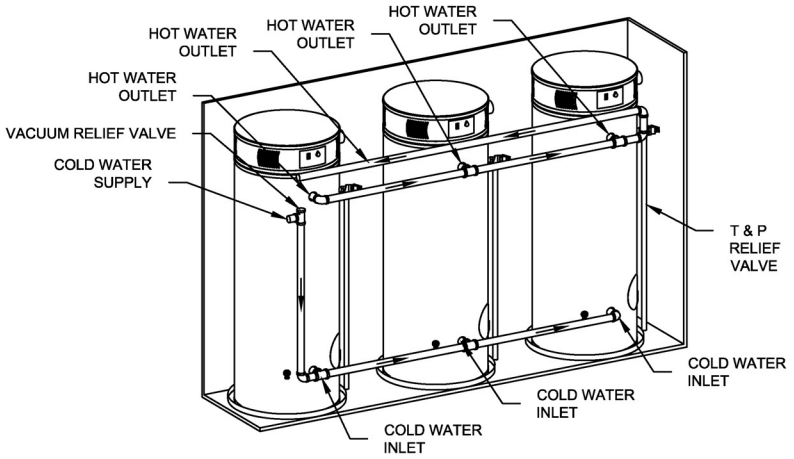

Figure 7. Typical Three Water Heater Connection

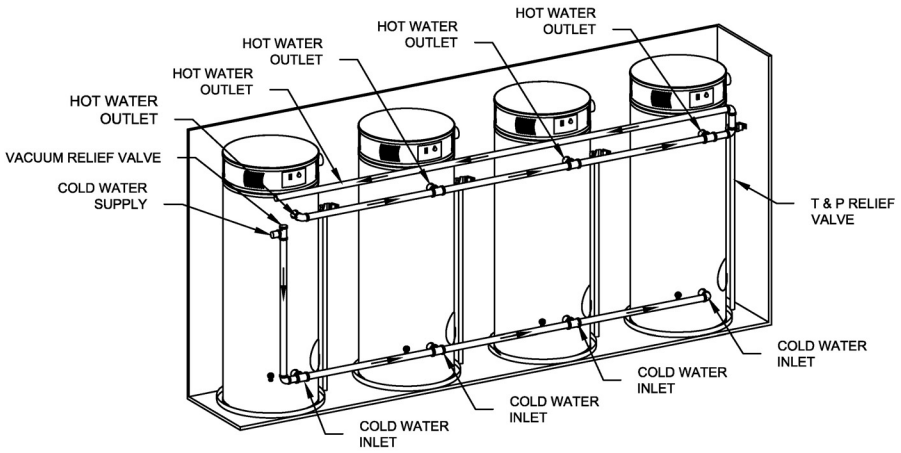

Figure 8. Typical Four Water Heater Connection

SECTION V: WATER CONNECTIONS

⚠ WARNING

Failure to install and maintain a new, listed temperature and pressure relief valve will release the manufacturer from any claim, which might result from excessive temperature and pressures.

Hydrogen gas can be produced in an operating water heater that has not had water drawn from the tank for a long period of time (generally two weeks or more). HYDROGEN GAS IS EXTREMELY FLAMMABLE. To prevent the possibility of injury under these conditions, we recommend the hot water faucet to be open for several minutes at the kitchen sink before you use any electrical appliance, which is connected to the hot water system. If hydrogen is present, there will be an unusual sound such as air escaping through the pipes as hot water begins to flow. Do not smoke or have open flame near the faucet at the time it is open.

Keep clear of the combination temperature and pressure relief valve discharge line outlet. The discharge may be hot enough to cause scald injury. The water is under pressure and may splash.

⚠ CAUTION

If sweat fittings are to be used, DO NOT apply heat to the nipples in front or side of the water heater. Sweat the tubing to the adapter before fitting the adapter to the water connections. It is imperative that heat is not applied to the nipples containing a plastic liner.

INSTRUCTIONS FOR CONNECTIONS

1. BEFORE PROCEEDING WITH THE INSTALLATION, CLOSE THE MAIN WATER SUPPLY VALVE. After shutting off the main water supply, open a faucet to relieve the water line pressure to prevent any water from leaking out of the pipes while making the water connections to the water heater. The COLD water inlet and HOT water outlet are identified on the water heater. Make the proper plumbing connections between the water heater and the plumbing system to the house. Install a shut-off valve in the cold water supply line.

2. If this water heater is installed in a closed water supply system, such as the one having a back-flow preventer in the cold water supply, provisions must be made to control thermal expansion. **DO NOT** operate this water heater in a closed system without provisions for controlling thermal expansion. Warranties do not cover damages from thermal expansion such as pressure bulges and/or deformities. Your water supplier or local plumbing inspector should be contacted on how to control this situation.

3. After installation of the water lines, open the main water supply valve and fill the water heater. While the water heater is filling, open several hot water faucets to allow air to escape from the water system. When a steady stream of water flows through the faucets, close them and check all water connections for possible leaks.

4. Never operate the water heater without first being certain it is filled with water.

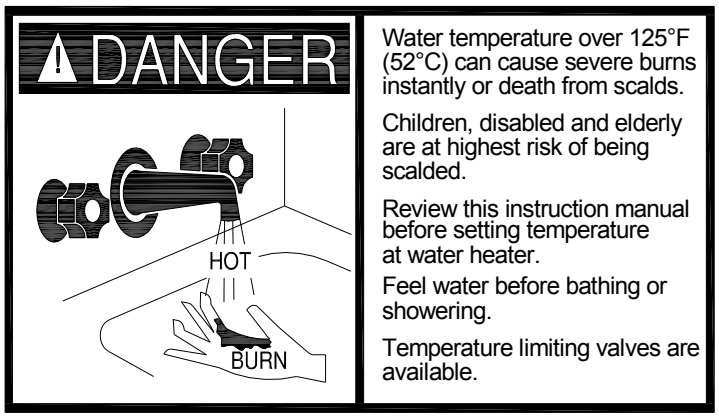

Figure 9. Scald Warning

SCALDING

This water heater can deliver scalding temperature water at any faucet in the system. Be careful whenever using hot water to avoid scalding injury. Certain appliances such as dishwashers and automatic clothes washers may require increased temperature water. By setting the thermostat on this water heater to obtain the increased temperature water required by these appliances, you might create the potential for scald injury. To protect against injury, you should install an ASSE approved mixing valve in the water system. This valve will reduce point of discharge temperature by mixing cold and hot water in branch supply lines. Such valves are available from the local plumbing supplier.

The following chart details the relationship of water temperature and time with regard to scald injury and may be used as a guide in determining the safest water temperature for your applications.

Approximate Time/Temperature Scald Chart

APPROXIMATE TIME/TEMPERATURE RELATIONSHIPS IN SCALDS	
120°F *(49°C)*	More than 5 minutes
125°F *(52°C)*	1½ to 2 minutes
130°F *(54°C)*	About 30 seconds
135°F *(57°C)*	About 10 seconds
140°F *(60°C)*	Less than 5 seconds
145°F *(63°C)*	Less than 3 seconds
150°F *(66°C)*	About 1½ seconds
155°F *(68°C)*	About 1 second

Table 2.

ALTERNATE SPACE HEATING WATER CONNECTIONS

⚠ DANGER

Toxic chemical, such as those used for boiler treatment, **must not** be introduced into potable water used for space heating.

This water heater **must not** be connected to an existing heating system or component(s) previously used with a non-potable water heating appliance.

All piping components connected to this water heater for space heating applications must be suitable for use with potable water.

⚠ WARNING

When the system requires water for space heating at temperatures higher than required for other uses, a means such as an ASSE approved mixing valve shall be installed to temper the water for those uses in order to reduce scald hazard potential.

Failure to properly pipe this water heater may result in improper operation and damage to the water heater or structure.

Oxygen contamination of this water heater will cause corrosion of iron and steel components, and can lead to water heater failure.

Connect the system supply and return piping to the water heater.

Refer to Figure 10 and Figure 11 for installation examples. Maintain a minimum ½ inch *(1.3 cm)* clearance from hot water piping to combustible materials.

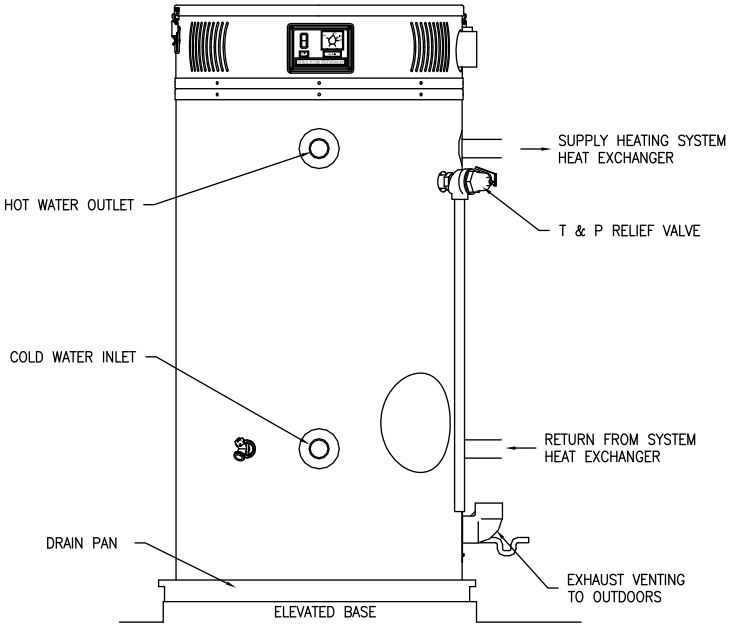

Figure 10. Alternate Space Heating Connections

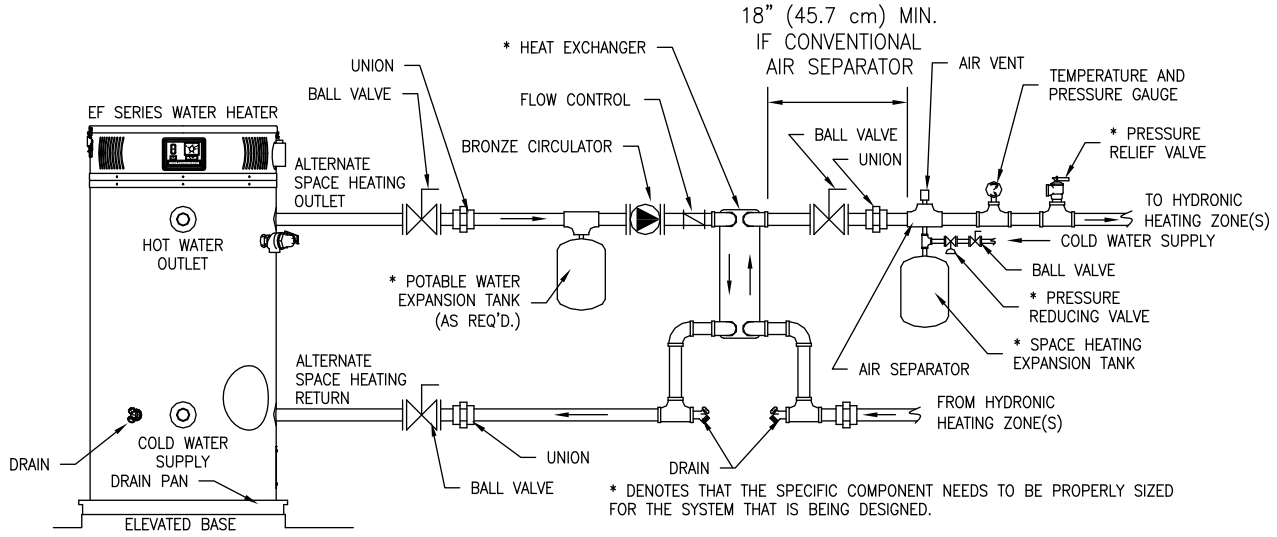

Figure 11. Typical Plumbing Schematic for Zoned Heating

SECTION VI: VENTING

⚠ WARNING
The vent system must be properly installed. Failure to properly install the vent system could result in property damage, personal injury, or death.
DO NOT install damaged venting system components. If damage is evident then please contact the supplier where the water heater was purchased or the manufacturer listed on the rating plate for replacement parts.
Use only the vent terminals provided or factory authorized terminals for venting this water heater.
The water heater requires its own separate venting system. Do not connect the exhaust vent into an existing vent pipe or chimney.
All of the exhaust venting connections must be leak checked with a soap solution upon initial start up of the water heater. Any leaks must be repaired before continuing operation of the water heater.
Do not terminate the venting where noise from the exhaust or intake will be objectionable. This includes locations close to or across from windows and doors. Avoid anchoring the vent and intake pipes directly to framed walls, floors, or ceilings unless rubber isolation pipe hangers are used. This prevents any vibrations from being transmitted into the living spaces.
Do not exceed the venting distances or the number of elbows listed in this manual. Exceeding the maximum venting distances may cause the water heater to malfunction or cause an unsafe condition.
DO NOT operate this water heater until the venting installation is complete and the piping completed. Failure to complete installation before operation can result in property damage, personal injury, or death.

Clearance to combustibles for all venting pipes and terminals	
For installations in the US 0" minimum	For installations in the CANADA 1" minimum
DO NOT place insulation or other materials in the required clearance spaces between the venting to combustible material unless otherwise specified.	

⚠ WARNING
Risk of carbon monoxide poisoning or fire due to joint separation or pipe breakage.
This water heater must be properly vented and connected to an approved vent system in good condition. **DO NOT** operate water heater with the absence of an approved vent system. A clean and unobstructed vent system is necessary to allow noxious fumes that could cause injury or loss of life to vent safely and will contribute toward maintaining the water heater's efficiency. The acceptance of the venting system is dependent upon full compliance with these installation instructions.
Venting system **must not** pass through rated fire separations.
The venting system must be free to expand and contract. This venting system **must be** supported in accordance with these instructions.

NOTICE

Single Wall Polypropylene venting systems that are listed on the Bradford White website are approved for use in the water heaters covered in this instruction manual. The venting system components are ULC S636 approved and listed by a recognized agency and may be installed in the U.S. and Canada. Complete instructions for the approved venting systems can be found on the Bradford White website, bradfordwhite.com or by calling the Technical Service Department at:1-800-334-3393.

⚠ WARNING

The approved polypropylene venting system Instruction Supplement listed on the Bradford White website for each manufacturer's venting system must be carefully read and followed by a qualified installer. Failure to properly install the vent system may result in property damage, personal injury, or death

NOTICE

For installations in Canada, field supplied vent piping must comply with CAN/CGA B149.1 (latest edition) and be certified to the Standard For Type BH, Class II, 65°C, Gas Venting Systems, ULC S636. Components of this listed system shall not be interchanged with other vent systems or unlisted pipe/fittings. All components and specified primers and cements of the certified vent system must be from a single system manufacturer and not intermixed with other system manufacturer's vent system parts. The supplied vent connector and vent termination are certified under ULC S636 and are also certified as part of the water heater. Refer to the following tables for approved venting materials, primers, and cements. All approved primers and cements are to be used within their marked time limitations.

Approved Venting Materials

For installations in the US only	For installations in CANADA
• PVC Sch. 40, 80 (ASTM D-1785) • PVC DWV (ASTM-D2665) • CPVC Sch. 40, 80 (ASTM-F441) • CPVC (ASTM D2846) • ABS Sch. 40 DWV (ASTM D2661)	• ULC S636 approved CAN-COM VENTING SYSTEM schedule 40 PVC for flue gas venting rated Class II, 65°C (components provided with water heater) • IPEX ULC S636 approved schedule 40 PVC (all other vent pipe/ fittings)

Approved Primers and Cements

For installations in the US only	For installations in CANADA
• PVC and CPVC Primer (ASTM F-656) • PVC Cement (ASTM D-2564) • CPVC Cement (ASTM F493) • ABS Primer and Cement (ASTM D-2235)	• IPEX ULC S636 approved PVC Primer and Cement for flue gas venting rated Class II, 65°C

⚠ CAUTION

Check to make sure flue gases **do not** recirculate into the air intake terminal when using direct venting. If the water heater is having service issues, flue recirculation may be a contributing factor. Even when the minimum vent terminal separation distances are followed, recirculation may still occur depending upon the location outside the building, the distance from other buildings, proximity to corners, weather conditions, wind patterns, and snow depth. Periodically check to make sure that flue recirculation is not occurring. Signs of flue gas recirculation include frosted or frozen intake terminals, condensate in the intake terminal and venting system, oxidation or white chalk material on the flame sensor or igniter shield. Correction to flue recirculation may involve angling the intake away from the exhaust terminal, increasing the distance between them, relocating the air intake to another side of the building, or using inside air for combustion. Check to be sure the intake and exhaust terminals are not obstructed, especially during periods of below freezing weather.

All intake and exhaust venting components **must** have the same diameter size. **Do not** use a different size on the intake and exhaust venting. For 4 inch *(10.2 cm)* venting, use the supplied 3 inch *(7.6 cm)* vent terminals.

Be sure the condensate runs freely to a drain and does not accumulate inside the water heater. In cold climates, precautions may need to be taken to insure that the condensate drain does not freeze. Make sure the condensate trap or drain loop is installed to prevent flue gases from being discharged into the room. Refer to the Venting section of the Installation and Operating Instructions Manual for complete instructions on venting and condensate drainage.

⚠ CAUTION

The vent shall terminate a minimum of 12 inches *(30.5 cm)* above expected snowfall level to prevent blockage of vent termination.

The horizontal centerline of the exhaust vent terminal (if applicable) **must not** be located lower than the horizontal centerline of the air intake terminal if vented through the same wall.

A service drain loop must be installed in the drain tubing to serve as a condensate trap to prevent flue gases from escaping into the room.

DO NOT position the air intake above the exhaust terminal.

NEVER locate the air intake where exhaust gases can be introduced.

NOTICE

Before beginning installation of any vent pipe, read the vent pipe manufacturer's installation instructions.

Do not install the water heater in any location where the ambient temperature may fall below freezing. Water heater must be protected from freezing downdrafts during shutdown periods.

Provide protection of the building materials from degradation by flue gases from the exhaust vent terminal.

VENTING

The venting instructions must be followed to avoid restricted combustion or recirculation of flue gases. Such conditions cause sooting or risks of fire and asphyxiation.

This water heater can be installed as either a direct vent system or power vent (air from inside) system. If it is installed as a direct vent system, then the air intake and the exhaust vent are piped to the outside. If a power vented system is used, then air is drawn from inside and only the exhaust is piped to the outside. Determine which system is best for your application and install as described in the following sections.

DIRECT VENT INSTALLATION

Venting may be run horizontally through an outside wall or vertically through a roof through using either 3 inch *(7.6 cm)* or 4 inch *(10.2 cm)* diameter pipe. This water heater is supplied with a screened intake elbow and exhaust coupling referred to as the air intake terminal and the exhaust vent terminal.

NOTICE

If 4 inch pipe is used, then a use a 4 inch *(10.2 cm)* to 3 inch *(7.6 cm)* reducer fitting before exiting the wall or roof to use the supplied screened intake and exhaust terminals.

Direct Vent Terminal Location

Plan the vent system layout so that proper clearances are maintained from plumbing and wiring. Before the vent is installed, determine the vent pipe termination location as shown in Figure 12.

NOTICE

The air intake and exhaust terminals may be located on separate outside walls or one terminal may exit the roof while the other is through the wall. The total combined equivalent vent length must be within the limits specified in the venting tables and the intake length cannot exceed the exhaust by more than 30 feet *(9 m)*. The minimum recommended vent separation distance between the intake and exhaust terminals is 36 inches *(91.4 cm)*. Local conditions may require a need for greater vent separation distances.

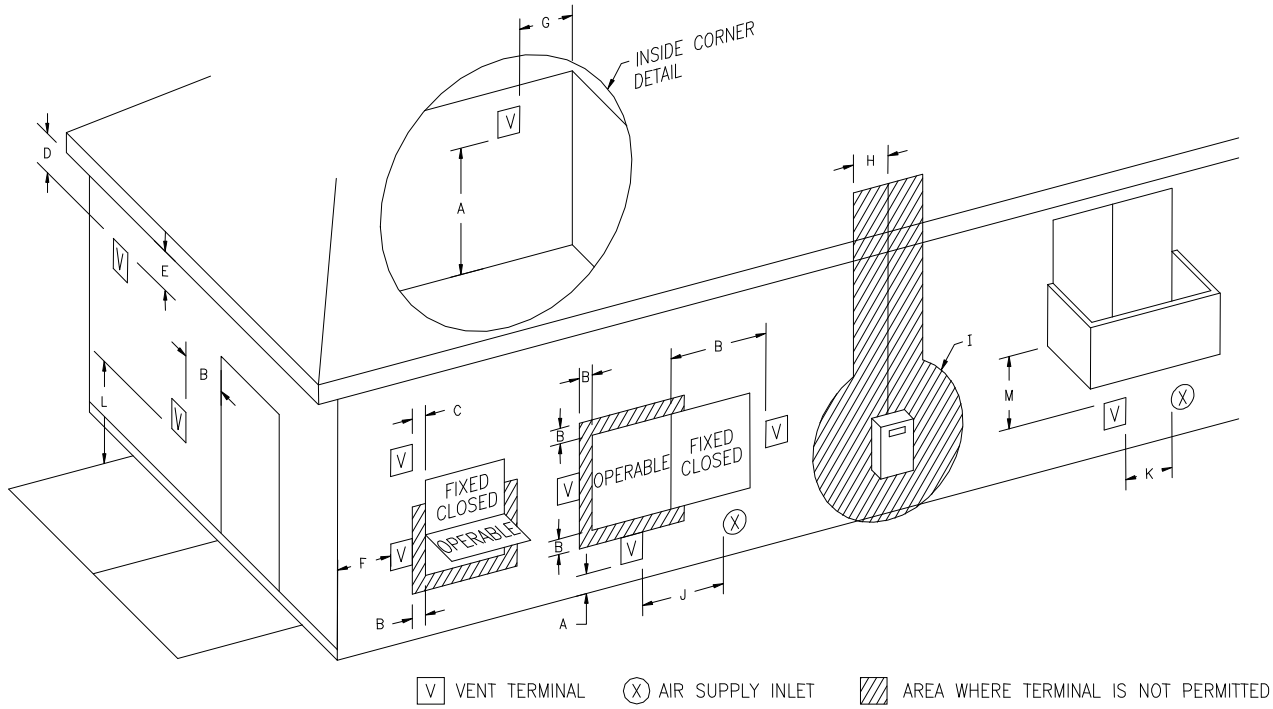

Figure 12a. Vent Terminal Clearances (Other than Direct Vent or "Power Vented" Installations)

		Canadian Installations[1]	US Installations[2]			Canadian Installations[1]	US Installations[2]
A=	Clearance above grade, veranda, porch, deck or balcony	12 inches *(30 cm)*	12 inches *(30 cm)*	H=	Clearance to each side of center line extended above meter/regulator assembly	3 feet *(91 cm)* within a height 15 feet *(4.6 m)* above the meter/regulator assembly	*b
B=	Clearance to window or door that may be opened	36 inches *(91 cm)*	4 feet *(1.2 m)* below or to the side of opening; 12 inches *(30 cm)* above opening	I=	Clearance to service regulator vent outlet or oil tank vent	36 inches *(91 cm)*	*b
C=	Clearance to permanently closed window	*b	*b	J=	Clearance to non-mechanical air supply inlet to building or the combustion air inlet to any other appliance	36 inches *(91 cm)*	4 feet *(1.2 m)* below or to side of opening; 12 inches *(30 cm)* above opening.
D=	Vertical clearance to ventilated soffit located above the terminal within a horizontal distance of 2 feet *(.6 m)* from the center line of the terminal	*b	*b	K=	Clearance to a mechanical air supply inlet	6 feet *(1.83 m)*	3 feet *(91 cm)* above if within 10 feet *(3 m)* horizontally
E=	Clearance to unventilated soffit	*b	*b	L=	Clearance above paved sidewalk or paved driveway located on public property	7 feet *(2.13 m)* †	7 feet *(2.13 m)* †
F=	Clearance to outside corner	*b	*b	M=	Clearance under a veranda, porch, deck, or balcony	12 inches *(30 cm)* ‡	*b
G=	Clearance to inside corner	36 inches *(91 cm)* *a	36 inches *(91 cm)* *a				

[1] In accordance with the current CAN/CGA-B149 *Installation Codes*.
[2] In accordance with the current ANSI Z223.1-(Latest Edition)/NFPA 54 *National Fuel Gas Code*.
† A vent shall not terminate directly above a sidewalk or paved driveway that is located between two single-family dwellings and serves both dwellings.
‡ Permitted only if a veranda, porch, deck or balcony is fully open on a minimum of two sides beneath the floor.
*a) A minimum clearance value determined by testing in accordance with section 2.20.
*b) "Clearance in accordance with local installation codes and the requirements of the gas supplier".

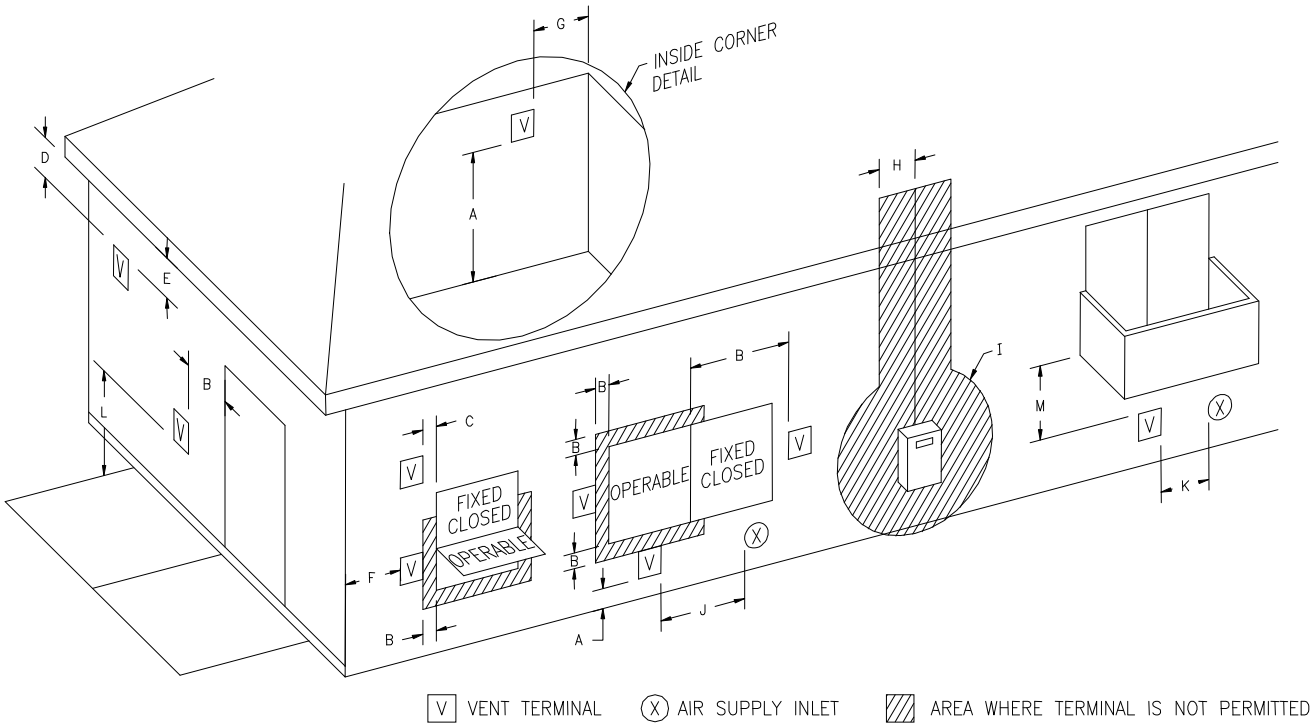

Figure 12b. Direct Vent Terminal Clearances

		Canadian Installations[1]	US Installations[2]			Canadian Installations[1]	US Installations[2]
A=	Clearance above grade, veranda, porch, deck or balcony	12 inches *(30 cm)*	12 inches *(30 cm)*	H=	Clearance to each side of center line extended above meter/regulator assembly	3 feet *(91 cm)* within a height 15 feet *(4.6 m)* above the meter/regulator assembly	*b
B=	Clearance to window or door that may be opened	36 inches *(91 cm)*	12 inches *(30 cm)*	I=	Clearance to service regulator vent outlet or oil tank vent	36 inches *(91 cm)*	*b
C=	Clearance to permanently closed window	*b	*b	J=	Clearance to non-mechanical air supply inlet to building or the combustion air inlet to any other appliance	36 inches *(91 cm)*	12 inches *(30 cm)*
D=	Vertical clearance to ventilated soffit located above the terminal within a horizontal distance of 2 feet *(.6 m)* from the center line of the terminal	12 inches *(30 cm)* *a	12 inches *(30 cm)* *a	K=	Clearance to a mechanical air supply inlet	6 feet *(1.83 m)*	3 feet *(91 cm)* above if within 10 feet *(3 m)* horizontally
E=	Clearance to unventilated soffit	12 inches *(30 cm)* *a	12 inches *(30 cm)* *a	L=	Clearance above paved sidewalk or paved driveway located on public property	7 feet *(2.13 m)* †	*b
F=	Clearance to outside corner	*b	*b	M=	Clearance under a veranda, porch, deck, or balcony	12 inches *(30 cm)* ‡	12 inches (30 cm) ‡
G=	Clearance to inside corner	36 inches *(91 cm)* *a	36 inches *(91 cm)* *a				

[1] In accordance with the current CAN/CGA-B149 *Installation Codes*.
[2] In accordance with the current ANSI Z223.1-(Latest Edition)/NFPA 54 *National Fuel Gas Code*.
† A vent shall not terminate directly above a sidewalk or paved driveway that is located between two single-family dwellings and serves both dwellings.
‡ Permitted only if a veranda, porch, deck or balcony is fully open on a minimum of two sides beneath the floor.
*a) A minimum clearance value determined by testing in accordance with section 2.20.
*b) "Clearance in accordance with local installation codes and the requirements of the gas supplier".

The vent system must terminate so that proper clearances are maintained as cited in local codes or the latest edition of the National Fuel Gas Code, ANSI Z223.1.73.4e and 7.8a, b as follows:

1. Do not terminate near soffit vents or crawl space or other area where condensate or vapor could create a nuisance or hazard or cause property damage.
2. Do not terminate the exhaust vent terminal where condensate or vapor could cause damage or could be detrimental to the operation of regulators, relief valves, or other equipment.
3. Do not terminate the exhaust vent terminal over public area or walkways where condensate or vapor can cause nuisance or hazard.
4. The vent shall terminate a minimum of 12 inches *(30.5 cm)* above expected snowfall level to prevent blockage of vent termination.
5. The manufacturer requires the centerline distances between the air intake and exhaust vent terminals to be a **minimum** of 36 inches *(91.4 cm)* apart and the exhaust terminal must extend 6 inches *(15.2 cm)* past the air intake terminal.

Vent pipes serving power vented appliances are classified by building codes as "vent connectors". Required clearances from combustible materials must be provided in accordance with information in this manual under LOCATION OF WATER HEATER and CLEARANCES, and with National Fuel Gas Code and local codes.

Horizontal Installation:

In a horizontal application, it is important that condensate not be allowed to buildup in the exhaust vent pipe. To prevent this from happening the pipe should be installed with a slight upward slope so the condensate will run back toward the water heater. The vent system **must be** supported every 5 feet *(1.5 m)* of vertical run and every 3 feet *(.9 m)* of horizontal run of vent pipe length.

⚠ CAUTION

Failure to properly support the vent piping with hangers and clamps may result in damage to the water heater or venting system.

Stress levels in the pipe and fittings can be significantly increased by improper installation. If rigid pipe clamps are used to hold the pipe in place, or if the pipe cannot move freely through a wall penetration, the pipe may be directly stressed, or high thermal stresses may be formed when the pipe heats up and expands. Install accordingly to minimize such stresses.

Follow the following procedure to vent through the wall:

1. Cut two 3 ½ in. *(8.9 cm)* diameter holes (for 3 inch (*7.6 cm*) diameter pipe) or 4 ½ inch *(11.4 cm)* diameter holes (for 4 inch *(10.2 cm)* diameter pipe) in the wall with the centerline hole distances at least 36 inches *(91.4 cm*) apart in the location where the exhaust vent and air intake terminals will exit the outside wall if vented on the same wall.

2. Use the proper cement to secure the exhaust vent and air intake terminals provided with the water heater to the plastic pipes. The distance between the back edge of the exhaust vent terminal and the exterior wall (see Figure 13) must be 6 inches *(12.7 cm)* more for the exhaust vent terminal than the air intake terminal. Use the proper cement or sealant and assembly procedures to secure the vent connector joints between the terminal and the blower outlet. Provide support brackets for every 3 feet *(.91 m)* of horizontal vent beyond the intake terminal.

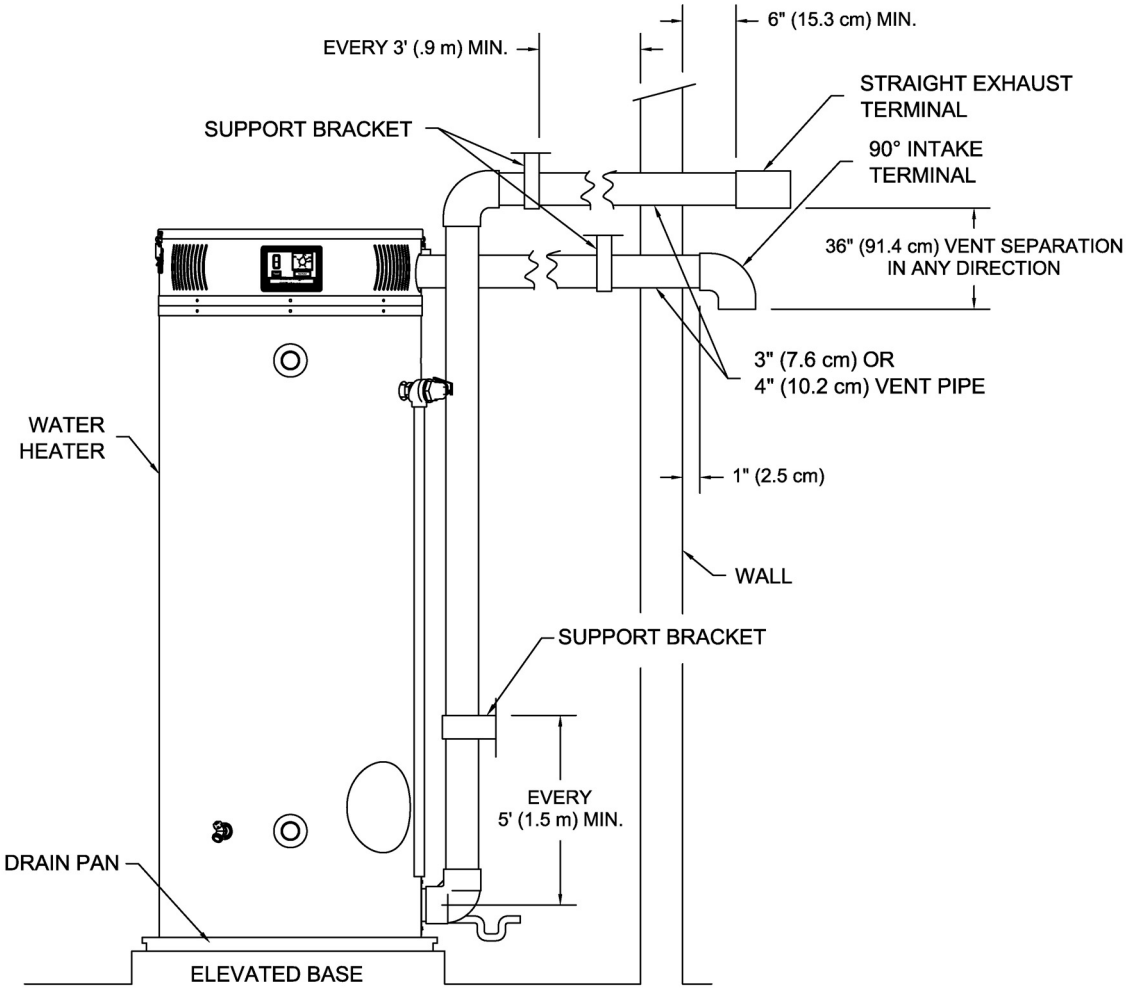

Figure 13. Typical Horizontal Direct Vent System

Vertical Installation:
Vertical venting system **must be** supported every 5 feet *(1.5 m)* of vertical run and every 3 feet *(.9 m)* of horizontal run of vent pipe length.

⚠ CAUTION

Failure to properly support the vent piping with hangers and clamps may result in damage to the water heater or venting system.

Stress levels in the pipe and fittings can be significantly increased by improper installation. If rigid pipe clamps are used to hold the pipe in place, or if the pipe cannot move freely through a wall penetration, the pipe may be directly stressed, or high thermal stresses may be formed when the pipe heats up and expands. Install accordingly to minimize such stresses.

Follow the following procedure to vent through the roof:

1. Cut the necessary holes through the roof and ceiling
2. Install the exhaust vent and air intake plastic pipes as shown in Figure 14. Make sure that the installation meets the local codes and/or The National Fuel Gas Code ANSI Z223.1 (Latest Edition) or CGA/CAN B149 Installation Code.

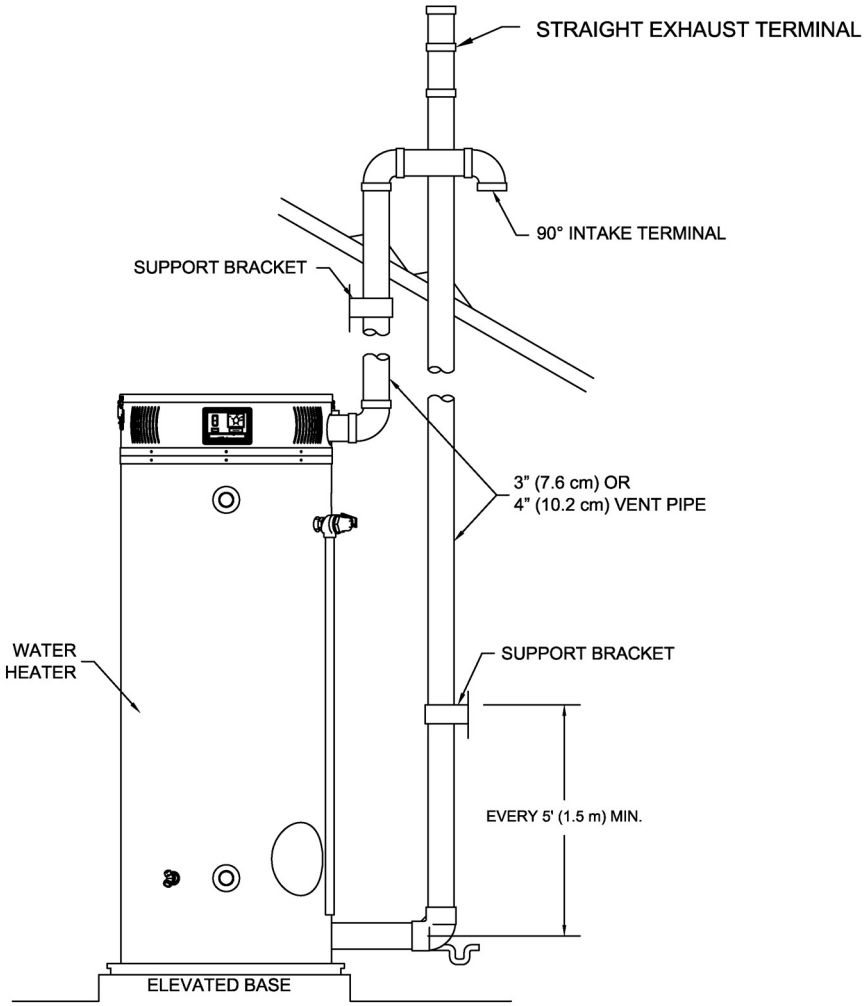

Figure 14. Typical Vertical Direct Vent System Installation
(Note: Intake and exhaust terminals may be on different outside walls.)

Through The Wall Venting With Low Ground Clearance:
When venting cannot exit through the wall at a height greater than or equal to 12 inches *(30.5 cm)* (and above expected snow level) from the ground, then the installation must be modified as shown below (see Figure 15).

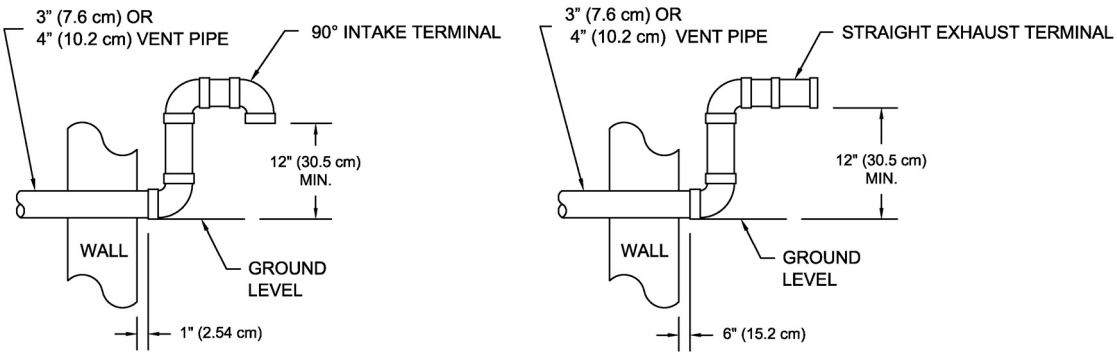

Figure 15. Vent Terminal (Low Ground Clearance)

Maximum Vent Length:

Direct Vent Maximum Vent Length (Combined Maximum Length for Intake and Exhaust)

Model Number	Max Vent Length feet *(meters)* 3 inch *(7.6 cm)* pipe	Max Vent Length feet *(meters)* 4 inch *(10.2 cm)* pipe
60 gal / 125,000 BTUH 100 gal / 150,000 BTUH	120 *(36.6)*	170 *(51.9)*
60 gal / 150,000 BTUH 100 gal / 199,999 BTUH	100 *(30.5)*	150 *(45.7)*
60 gal / 199,999 BTUH 100 gal / 250,000 BTUH	80 *(24.4)*	130 *(39.6)*
100 gal / 300,000 BTUH	60 *(18.3)*	110 *(33.5)*
100 gal / 399,999 BTUH	50 *(15.2)*	100 *(30.5)*

Table 3

Note: The venting distance shown in the chart above is the combined maximum distance for the intake and exhaust pipe and elbows. The intake and exhaust vent terminals may be in different locations (i.e., different walls or one wall, one roof) provided the intake equivalent venting distance does not exceed the exhaust by more than 30 feet *(9 m)*.

Determining required vent length:

1. Determine the total length of straight vent pipe (in feet) required for both the intake and the exhaust.
2. Add 5 feet *(1.5 m)* of venting for every 90° elbow.
3. Add 2 ½ feet *(.7 m)* of venting for every 45° elbow.
4. **Total vent length cannot exceed "Max Vent Length" in Table 3.**
5. **Air intake cannot exceed exhaust by more than 30 feet *(9 m)* in any venting situation.**

Example of Total Direct Vent Length for EF100T199:
A 3 inch *(7.6 cm)* venting system has a total of six 90-degree elbows and a total straight pipe length of 65 feet *(19.5 m)* (includes both intake and exhaust pipe).
Equivalent vent length for elbows: 6 x 5 feet *(1.5 m)* = 30 feet *(9 m)*.
Total equivalent vent distance = 65 feet *(19.5 m)* + 30 feet *(9 m)* = 95 feet *(28.5 m)* total equivalent vent length. This is below the maximum allowed distance of 100 feet *(30 m)* for this model using 3 inch *(7.6 cm)* vent.

NOTICE

Do not include the 3 inch *(7.6 cm)* condensate elbow or vent terminals in determining maximum vent length.

POWER VENT INSTALLATION
Power venting is where the indoor air is used and the exhaust is vented to the outside. Venting may be run horizontally through an outside wall or vertically through a roof through using either 3 inch *(7.6 cm)* or 4 inch *(10.2 cm)* diameter pipe. This water heater is supplied with a screened intake elbow and exhaust coupling referred to as the air intake terminal and the exhaust vent terminal

Power Vent Terminal Location:
Refer to the "Direct Vent Terminal Location" section previously mentioned to determine the proper exhaust vent location. Plan the vent system layout so that proper clearances are maintained from plumbing and wiring.
Vent pipes serving power vented appliances are classified by building codes as "vent connectors". Required clearances from combustible materials must be provided in accordance with information in this manual under LOCATION OF WATER HEATER, and CLEARANCES, and with National Fuel Gas Code and local codes.

Horizontal Installation:

In a horizontal application, it is important that condensate not be allowed to buildup in the exhaust vent pipe. To prevent this from happening, the pipe should be installed with a slight upward slope of ¼ inch *(.6 cm)* per foot *(.3 m)*. The vent system **must be** supported every 5 feet *(1.5 m)* of vertical run and every 3 feet *(.9 m)* of horizontal run of vent pipe length.

⚠ CAUTION

Failure to properly support the vent piping with hangers and clamps may result in damage to the water heater or venting system.

Stress levels in the pipe and fittings can be significantly increased by improper installation. If rigid pipe clamps are used to hold the pipe in place, or if the pipe cannot move freely through a wall penetration, the pipe may be directly stressed, or high thermal stresses may be formed when the pipe heats up and expands. Install accordingly to minimize such stresses.

Follow the following procedure to vent through the wall:

1. Cut one 3 ½ inch *(8.9 cm)* diameter hole (for 3 inch (*7.6 cm*) diameter pipe) or 4 ½ inch *(11.5 cm)* diameter hole (for 4 inch *(10.2 cm)* diameter pipe).

2. Use the proper cement or sealant to secure the exhaust vent terminal provided with the water heater to the plastic pipes. The distance between the back edge of the exhaust vent terminal and the exterior wall (see Figure 16) must 6 inches *(15.2 cm)*. Use the proper cement and assembly procedures to secure the vent connector joints between the terminal and the blower outlet. Provide support brackets for every 3 feet *(.9 m)* of horizontal vent.

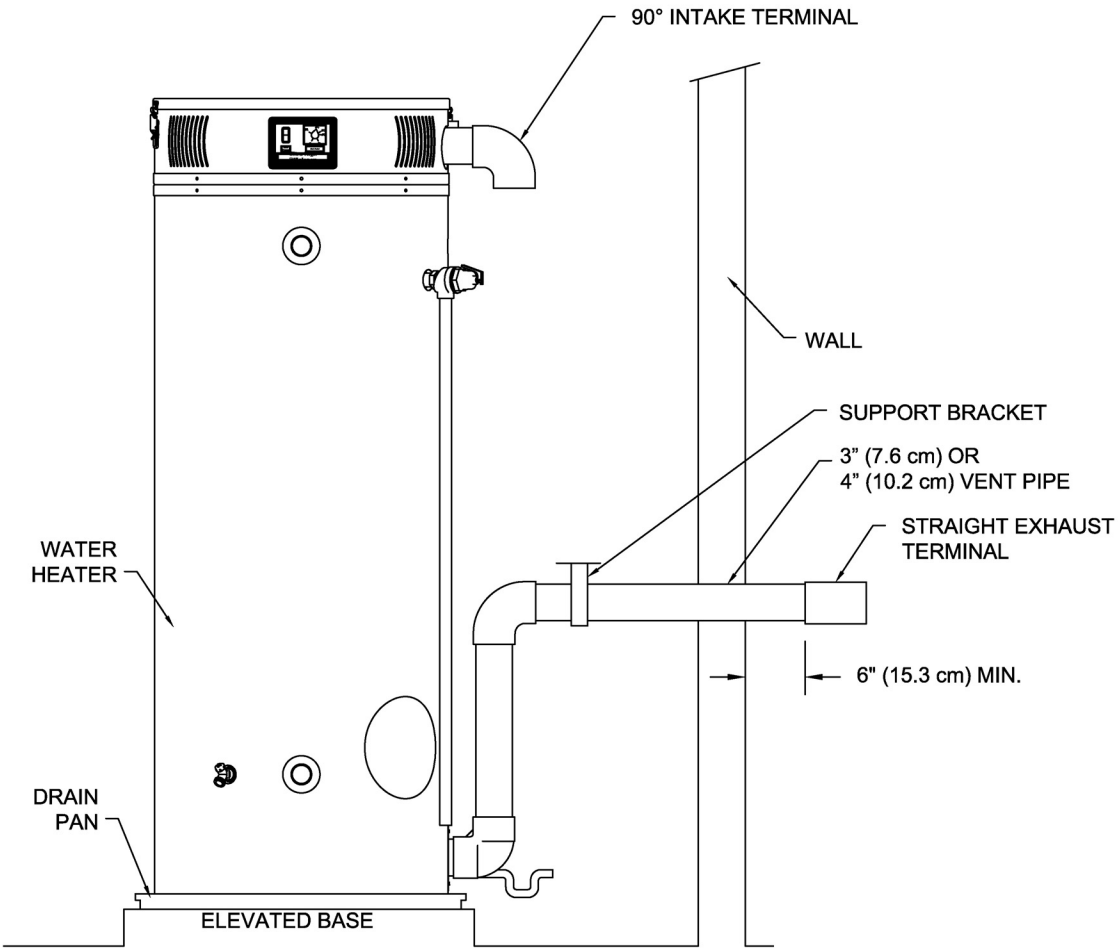

Figure 16. Typical Horizontal Power Vent System

Vertical Installation:
Vertical venting **must be** supported every 5 feet *(1.5 m)* of vertical run and every 3 feet *(.9 m)* of horizontal run of vent pipe length.

Stress levels in the pipe and fittings can be significantly increased by improper installation. If rigid pipe clamps are used to hold the pipe in place, or if the pipe cannot move freely through a wall penetration, the pipe may be directly stressed, or high thermal stresses may be formed when the pipe heats up and expands. Install accordingly to minimize such stresses.

⚠ CAUTION

Failure to properly support the vent piping with hangers and clamps may result in damage to the water heater or venting system.

Follow the following procedure to vent through the roof:

1. Cut the necessary holes through the roof and ceiling
2. Install the exhaust vent and air intake plastic pipes as shown in Figure 17. Make sure that the installation meets the local codes and/or The National Fuel Gas Code ANSI Z223.1 (Latest Edition) or CGA/CAN B149 Installation Code.

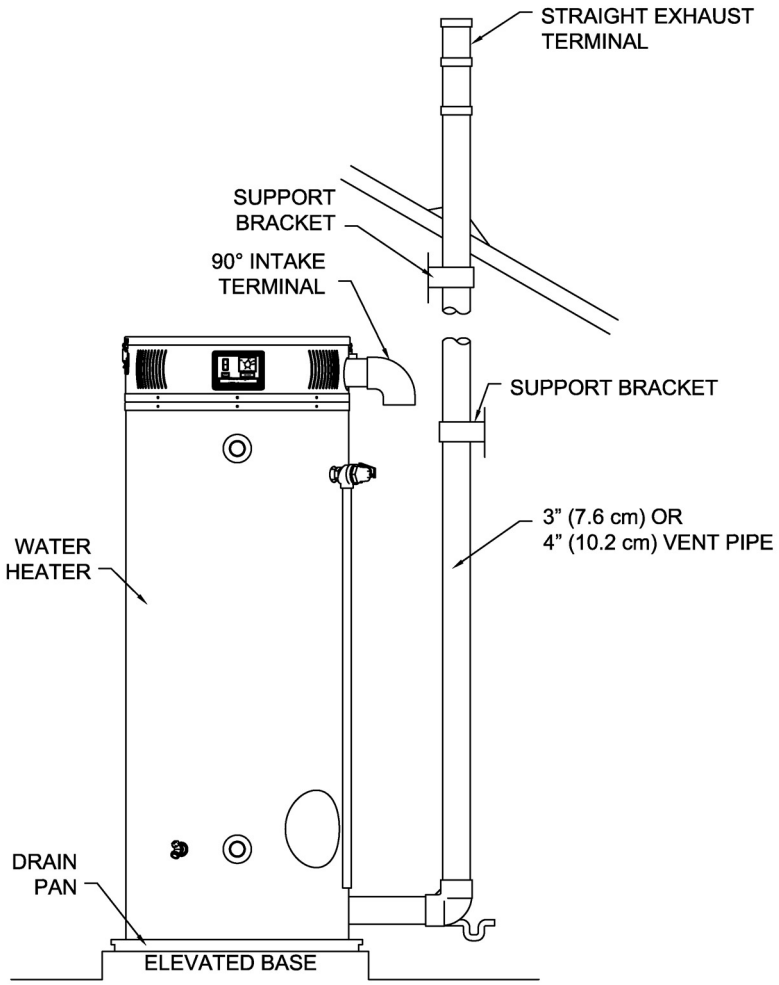

Figure 17. Typical Vertical Power Vent System Installation

<u>Through The Wall Venting With Low Ground Clearance:</u>
When venting cannot exit through the wall at a height greater than or equal to 12 inches *(30.5 cm)* (and above expected snow level) from the ground, then the installation must be modified as shown below (see Figure 18). Refer to Tables 3 or 4 for maximum venting lengths using 3 inch *(7.6 cm)* or 4 inch *(10.2 cm)* diameter plastic pipe.

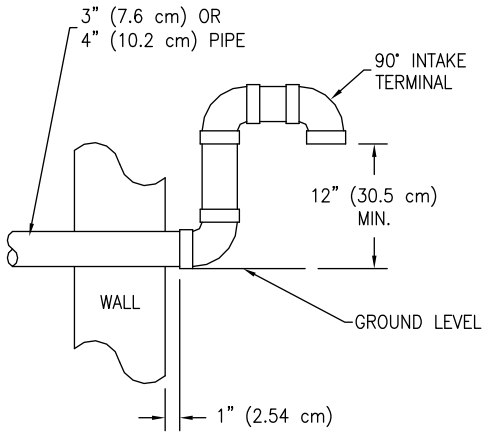

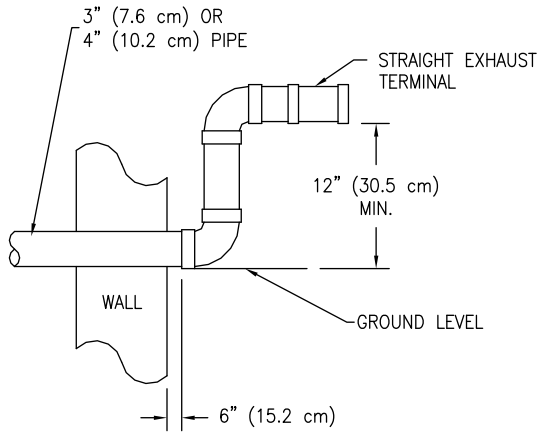

Figure 18. Vent Terminal (Low Ground Clearance)

Maximum Vent Length Determination

Power Vent Maximum Vent Length

Model Number	Max Vent Length feet *(meters)* 3 inch *(7.6 cm)* pipe	Max Vent Length feet *(meters)* 4 inch *(10.2 cm)* pipe
60 gal / 125,000 BTUH 100 gal / 150,000 BTUH	120 *(36.6)*	170 *(51.9)*
60 gal / 150,000 BTUH 100 gal / 199,999 BTUH	100 *(30.5)*	150 *(45.7)*
60 gal / 199,999 BTUH 100 gal / 250,000 BTUH	80 *(24.4)*	130 *(39.6)*
100 gal / 300,000 BTUH	60 *(18.3)*	110 *(33.5)*
100 gal / 399,999 BTUH	50 *(15.2)*	100 *(30.5)*

Table 4

Determining required vent length:

1. Determine the total length of straight vent pipe (in feet) required.
2. Add 5 feet *(1.5 m)* of venting for every 90° elbow.
3. Add 2 ½ feet *(.7 m)* of venting for every 45° elbow.
4. **Total vent length cannot exceed "Max. Vent Length" in Table 4.**

Example of Total Vent Length for EF100T199 with a power vented installation:

A 3 inch *(7.6 cm)* venting system has a total of six 90-degree elbows and a total straight pipe length of 55 feet *(16.5 m)*.

Equivalent vent length for elbows: 6 x 5 feet *(1.5 m)* = 30 feet *(9 m)*.

Total equivalent vent distance = 55 feet *(16.5 m)* + 30 feet *(9 m)* = 85 feet *(25.5 m)* total equivalent vent length. This is below the maximum allowed distance of 100 feet *(30 m)* for this model using 3 inch *(7.6 cm)* vent.

NOTICE

Do not include the 3 inch (*7.6 cm*) condensate elbow or vent terminals in determining maximum vent length.

MULTIPLE INTAKE/EXHAUST TERMINAL SEPARATION DISTANCES

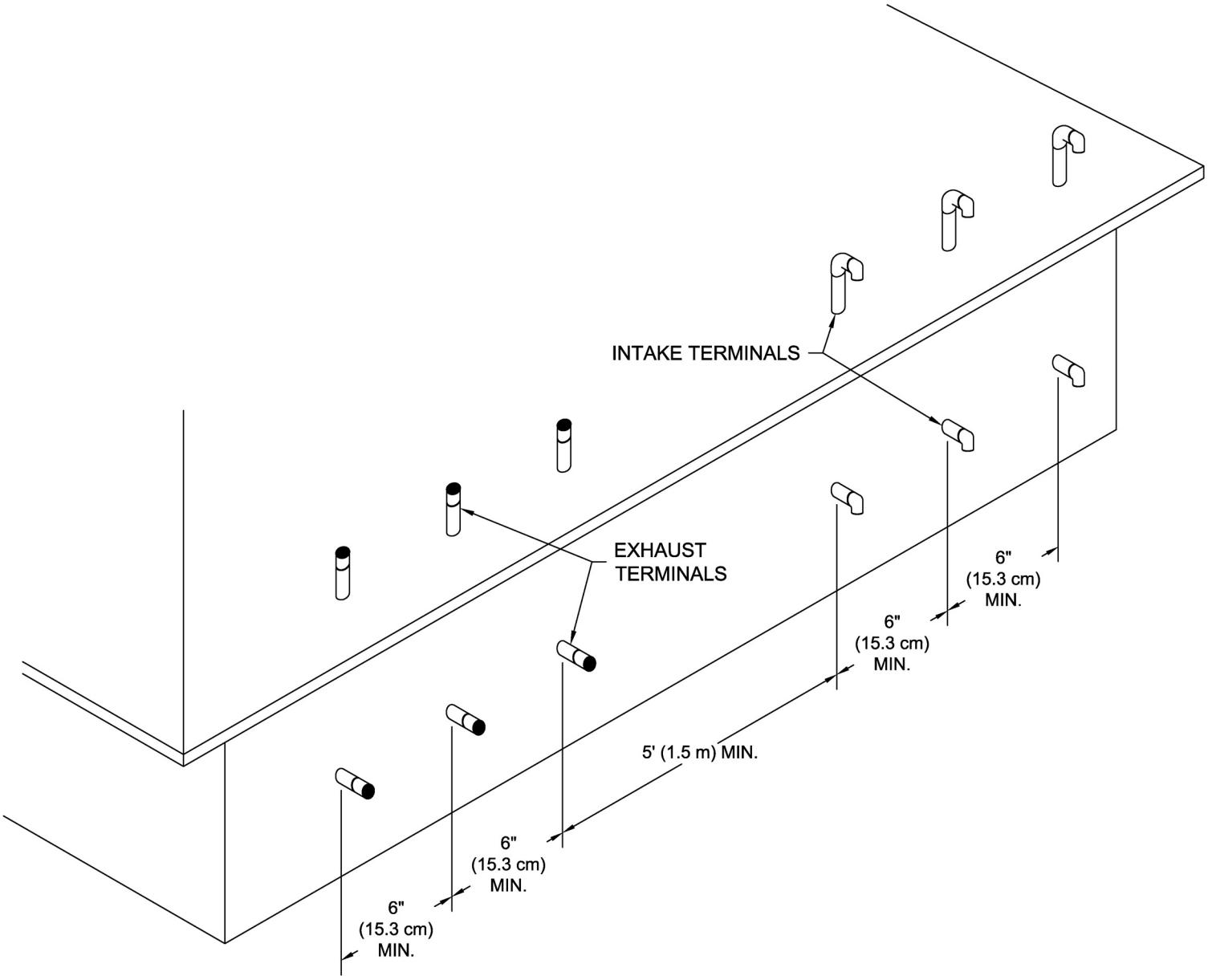

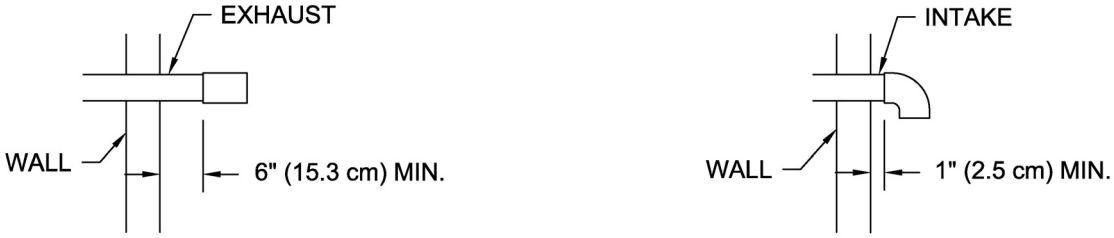

Note: When installing multiple intake/exhaust terminals on the same wall of a building, the nearest intake terminal must be at least 5 feet *(1.5 m)* from the nearest exhaust terminal. Spacing requirements are the same for roof installation.

CONCENTRIC VENT TERMINAL INSTALLATION PROCEDURE

⚠ WARNING

Improper installation, adjustment, service, or maintenance can cause property damage, personal injury, or death. Consult a qualified installer, service agency, or the gas supplier for information or assistance.

This kit must be used only for terminating this water heater. Do not use this termination kit for any other appliance. Using this kit on other appliances and/or water heaters can result in property damage, personal injury, or death.

DO NOT operate this water heater until the installation and assembly of this kit is complete and the piping completed. Failure to complete installation before operation can result in property damage, personal injury, or death.

Before beginning any installation, be sure the main electrical disconnect switch is in the OFF position. Electrical shock can cause personal injury or death.

DO NOT operate this water heater with the rain cap removed or recirculation of combustion products may occur. Water may also collect inside larger combustion-air pipe and flow to the burner assembly. Failure to follow this warning could result in product damage, or improper operation, personal injury or death.

⚠ CAUTION

DO NOT use field-supplied couplings to extend pipes. Airflow restriction will occur and the water heater pressure switches may cause intermittent problems.

Vertical Installation (Recommended):

1. Become familiar with concentric vent kit part no. 239-44069-01. Refer to instructions inside concentric vent kit.

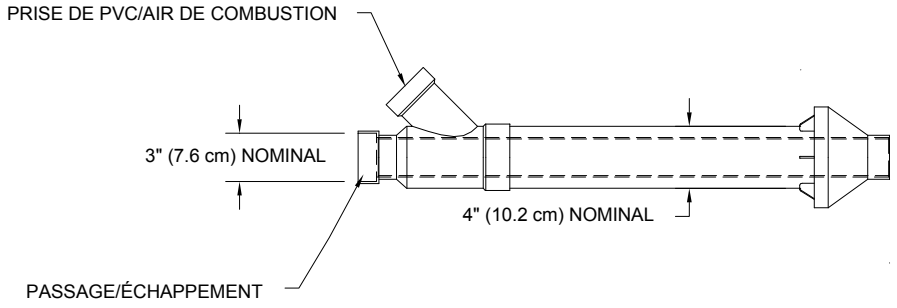

Figure 19. Dimensional Layout of Concentric Vent Kit

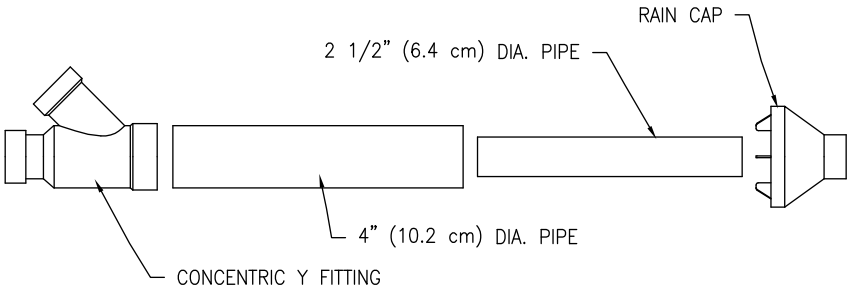

Figure 20. Concentric Vent Kit Part Identification

2. Determine the best location for the termination kit.
3. Cut the recommended 5 inch *(12.7 cm)* diameter hole.
4. Partially assemble vent kit by performing the following:
   a. Cement concentric Y fitting to larger diameter pipe. (See Figure 20).
   b. Cement rain cap to smaller diameter pipe. (See Figure 21).

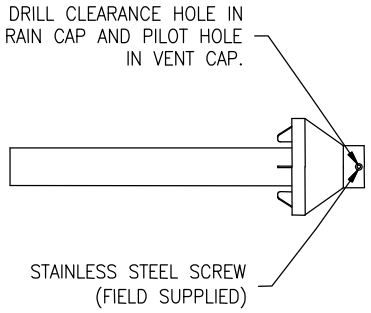

Figure 21. Rain Cap to Small Vent Pipe Ass'y

5. Install concentric Y fitting and pipe assembly through the structure's hole and field-supplied roof boot/flashing. Do not allow insulation or other materials to accumulate inside pipe assembly when installing through the hole.
6. Secure assembly to roof structure as shown in Figure 22 using field-supplied metal strapping or equivalent support material.

NOTICE
Ensure termination height is above the roof surface or anticipated snow level. Figure 22.
If assembly is too short to meet height requirements, the two pipes supplied in the kit may be replaced by using the same diameter pipe. DO NOT extend the overall dimension by more than 60 inches *(152.4 cm)*. See Fig. 19.

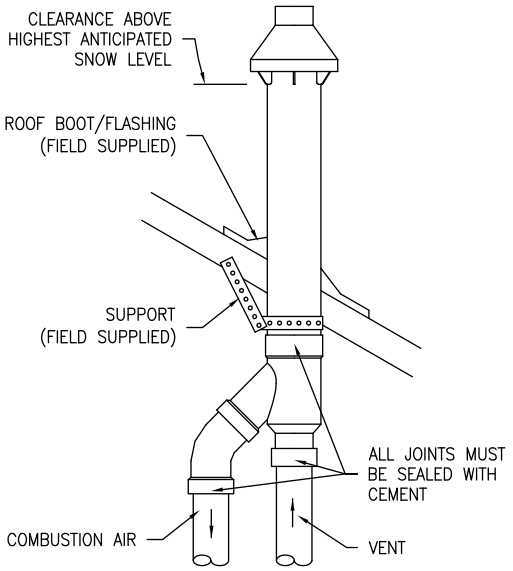

Figure 22. Concentric Vent Roof Top Attachment

7. Install rain cap and small diameter pipe assembly in roof penetration assembly. Ensure small diameter pipe is cemented and bottomed in Y concentric fitting.
8. Cement heater combustion-air and vent pipes to concentric y fitting assembly (Figure 20). See Figure 22 for proper pipe attachment.
9. Operate heater through one cycle to ensure combustion-air and vent pipes are properly connected and sealed to concentric vent termination connections.

<u>Horizontal Installation:</u>

1. Become familiar with coaxial vent kit part no. 239-44069-01. As shown in Figures 19 through 21.
2. Determine the best location for the termination kit.

NOTICE
Position termination where vent vapors will not damage plants/shrubs or air conditioning equipment.
Position termination where vent vapors will not be adversely affected by wind condition.
Position termination where it will not be damaged or be subjected to foreign objects.
Position termination where vapors will not be objectionable.

3. Cut the recommended 5 inch *(12.7 cm)* diameter hole.
4. Partially assemble vent kit.
    a. Cement Y concentric fitting to larger diameter kit pipe. (See Figure 20).
    b. Cement rain cap to smaller diameter kit pipe. (See Figure 21).

5. Install concentric Y fitting and pipe assembly through the structure's hole and field-supplied roof boot/flashing. Do not allow insulation or other materials to accumulate inside pipe assembly when installing through the hole.
6. Install rain cap and small diameter pipe assembly in concentric Y fitting and large pipe assembly. Ensure small diameter pipe is cemented and bottomed in concentric Y fitting.
7. Secure assembly to structure as shown in Figure 23a. Ensure clearances as shown in Figure 23a.

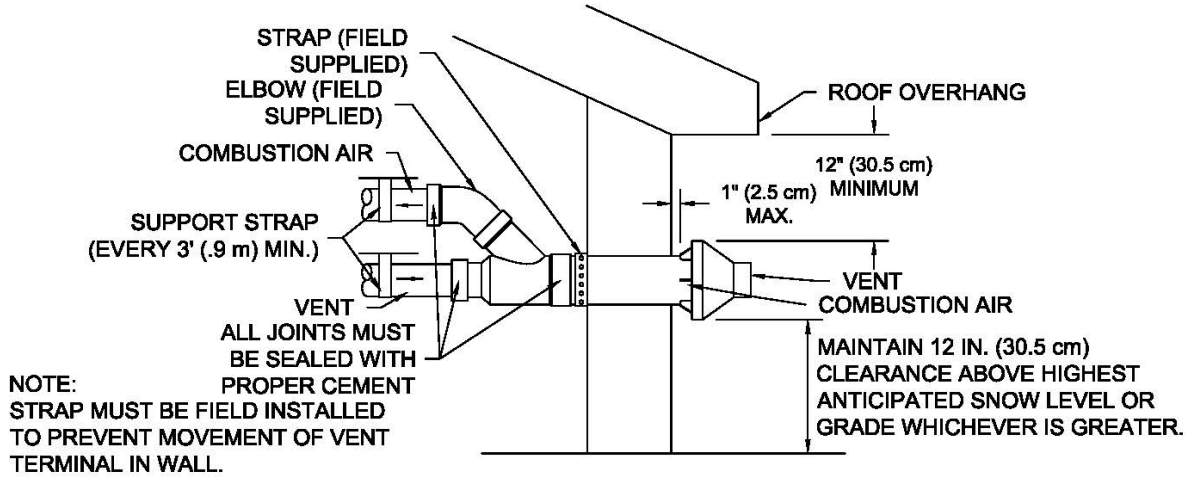

Figure 23a. Concentric Vent Side Wall Attachment

8. Cement heater combustion-air and vent pipes to concentric Y fitting termination assembly. See Figure 23a for proper pipe attachment.
9. Operate heater through one cycle to ensure combustion-air and vent pipes are properly connected and sealed to concentric vent termination connections.

It is acceptable to install a 90 degree elbow on IPEX concentric vent terminations use with this power direct vent water heater (see Figure 23b). A short length of appropriate diameter vent pipe should be used to transition from the vent terminal to the 90 degree elbow. Approved venting materials along with primers and cements are listed at the beginning of this venting section. When the 90 degree elbow is used the equivalent length of the elbow and short length of vent pipe must be factored into the total vent/air intake pipe determinations (see Tables 3 and 4 for appropriate vent connector lengths).

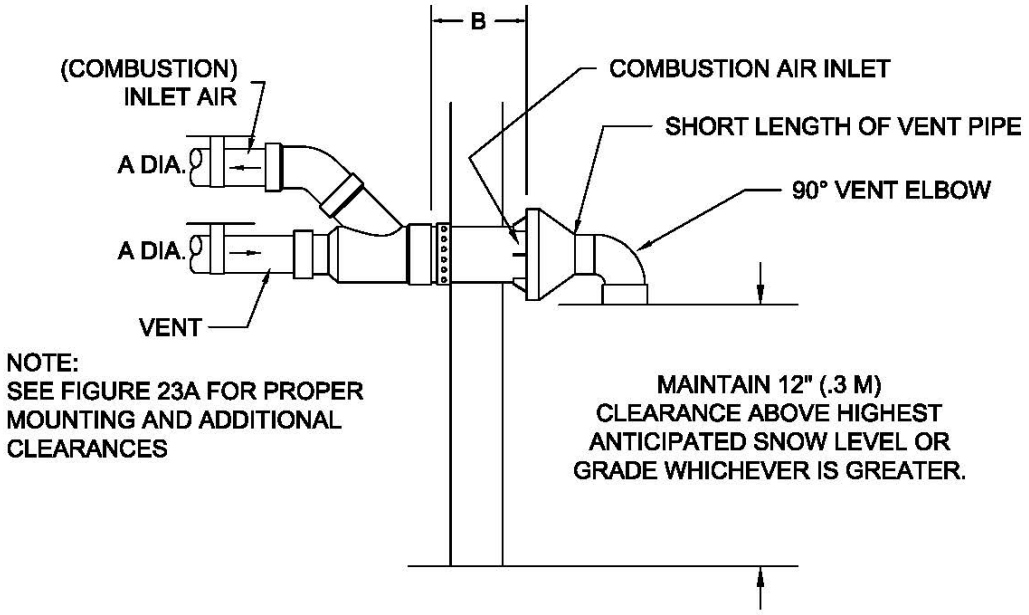

Figure 23b

(A) VENT DIAMETER	(B) DIMENSION	
	MIN	MAX
3" (7.6 CM)	*12" (30.5 CM)*	*44" (111.8 CM)*

VENT PIPE PREPARATION

⚠ WARNING

DO NOT attempt to start this water heater until vent pipe solvent fumes completely clear from the room and inside the vent piping.

Vent Pipe Preparation and Joining

Most failures in vent systems result from improper preparation and joining of pipe and fittings. The guidelines below must be followed when installing the venting system. If you have any question about the application or installation of the venting system, contact the vent pipe manufacturer, supplier, or your plumbing professional.

1) Specific cleaners, solvents, primers and cements are available for PVC, CPVC, and ABS pipe. Be sure these materials match the type of pipe to be installed. The vent pipe manufacturers joining instructions must be followed in all cases. Never use all-purpose cements, commercial glues and adhesives or ABS cement to join PVC or CPVC pipe and fittings. Refer to the table at the beginning of the "Venting" section for approved primers and cements.
    a) **CLEANERS, SOLVENTS, PRIMERS AND CEMENTS ARE FLAMMABLE. Do not store or use these materials near heat or open flame, or in the vicinity of other appliances.**
2) Use proper cutting, deburring and applicator tools to ensure proper preparation and joining of pipe and fittings.
    a) Cutting Tools
        i) A square cut must be achieved with a miter box saw or pipe cutter to ensure a proper mating with the female. If a pipe cutter is used, the burr created at the outer edge of the pipe must be removed.
    b) Deburring Tools
        i) A file, knife or plastic deburring tool can be used to remove burrs. Burrs must be removed from the inside and outside edges of the pipe to ensure a proper seal.
    c) Applicator Tools
        i) A natural bristle paintbrush or roller may be used to apply cement. Prompt application of the cement is important due its fast drying properties.
3) Inspection, Cleaning, Priming and Cementing
    a) Inspect the pipe inside and out for dirt, dust, moisture or grease etc. Check pipe and fittings for splits or cracks and replace if found.
    b) Clean pipe and fittings are imperative for proper joining. Following cutting and deburring, wipe away any foreign material with a clean dry rag. If wiping fails to thoroughly clean surfaces, chemical cleaning is necessary.
    c) Primer must be applied to the pipe surface and fitting socket with a natural bristle brush. This serves to soften and prepare the pipe for cementing.
    d) Cementing must be done quickly to avoid over-drying before joining.
        i) Apply one coat to the outside end of the pipe at a width slightly greater than the depth of the socket.
        ii) Apply a coat around the inside of the fitting socket.
        iii) Apply a second coat around the end of the pipe.
4) Joining
    a) Joints should be made immediately after cement is applied.
    b) After fully inserting pipe into fitting socket, hold joint together for about 15 to 20 seconds.
    c) Remove excess cement from around pipe and fitting with a clean rag.
    d) Cement drying times may vary. Be sure to allow for the recommended drying time before disturbing joints.

For more specific and detailed information about the above, contact the vent pipe manufacturer, supplier, or competent professional.

SAFETY PRECAUTION: PRIMERS AND CEMENTS ARE EXTREMELY FLAMMABLE AND MUST NOT BE STORED OR USED NEAR HEAT OR OPEN FLAME. ALSO, USE ONLY IN A WELL VENTILATED AREA.

Approved Venting Materials	
For installations in the US only • PVC Sch. 40, 80 (ASTM D-1785) • PVC DWV (ASTM-D2665) • CPVC Sch. 40, 80 (ASTM-F441) • CPVC (ASTM D2846) • ABS Sch. 40 DWV (ASTM D2661)	**For installations in CANADA** • ULC S636 approved CAN-COM VENTING SYSTEM schedule 40 PVC for flue gas venting rated Class II, 65°C (components provided with water heater) • IPEX ULC S636 approved schedule 40 PVC (all other vent pipe/ fittings)
Approved Primers and Cements	
For installations in the US only • PVC and CPVC Primer (ASTM F-656) • PVC Cement (ASTM D-2564) • CPVC Cement (ASTM F493) • ABS Primer and Cement (ASTM D-2235)	**For installations in CANADA** • IPEX ULC S636 approved PVC Primer and Cement for flue gas venting rated Class II, 65°C

SECTION VII: GAS CONNECTIONS

⚠ WARNING

Connect this water heater only to the type of gas as shown on the rating plate. Use clean black iron pipe or equivalent material approved by local codes and ordinances. (Dirt and scale from the pipe can enter the gas valve and cause it to malfunction). The inlet gas line must have at least a 3 inch *(7.62 cm)* drip leg (sediment trap) installed as close to the water heater's gas valve as possible. A ground joint union must be installed in the gas supply line, as close to the water heater as possible, to permit servicing of the water heater. Compounds used on the threaded joints of the gas piping must be resistant to the action of liquefied petroleum gases/propane gas. DO NOT apply pipe dope to the gas valve inlet and make certain that no pipe dope has become lodged in the inlet screen of the gas valve. Extreme care must be taken to ensure no pipe dope enters the gas valve and to avoid excessive torque when tightening the gas supply line to the gas valve. Excessive torque may result in cracking of the gas valve housing. The suggested maximum torque is 31.5 foot lbs. *(4.4 kg-m)*. The manufacturer of this water heater will not be liable for any damage or injury caused as a result of a cracked gas inlet as a result of excessive torque.

This water heater and its gas connection must be leak tested before placing the water heater in operation. Check for gas leaks with a soap and water solution and a brush or a commercial leak detector fluid.
NEVER USE A MATCH OR OPEN FLAME FOR TESTING!

The water heater is not intended for operation at higher than 14 inches *(3483.8 Pa)* water column (½ psi *(3.5 kPa)*) supply gas pressure. Higher gas supply pressures require supplemental reducing service regulation. Exposure to higher gas supply pressure may cause damage to the gas controls, which could result in fire or explosion. If overpressure has occurred such as through improper testing of gas lines or emergency malfunction of the supply system, the gas valve must be checked for safe operation. Make sure that the outside vents on the supply regulators and the safety vent valves are protected against blockage. These are parts of the gas supply system, not the water heater.

⚠ CAUTION

The water heater and individual shutoff valve must be disconnected from the gas supply piping system during any pressure testing of the system at test pressures in excess of ½ psi *(3.5 kPa)*. The water heater must be isolated from the gas supply piping system by closing its manual shutoff valve during any pressure testing of the gas supply system at test pressures equal to or less than ½ psi *(3.5 kPa)*. The supply line must be capped when not connected to the water heater.

If copper supply lines are used, they must be internally tinned and certified for gas service.

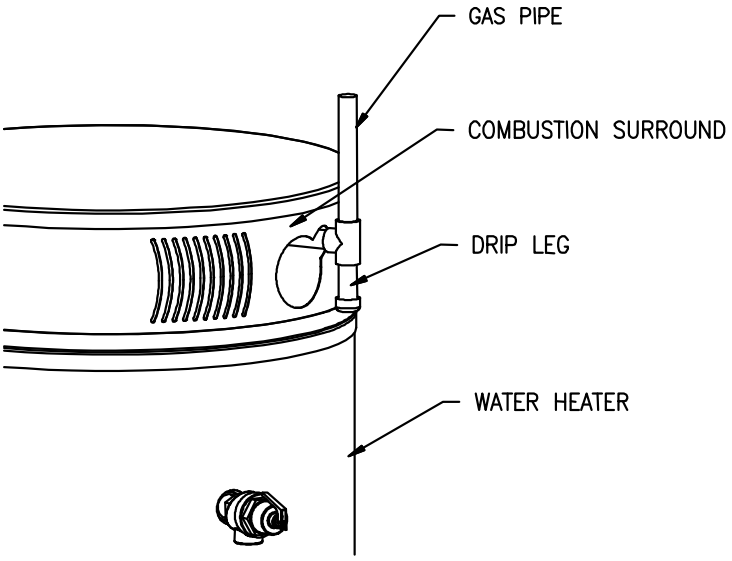

Figure 24. Drip Leg

The gas supply lines must meet all requirements of the National Fuel Gas Code ANSI Z223.1 (Latest Edition), or in Canada CAN/CGA B149.1 Natural Gas Installation Code (Latest Edition) or CAN/CGA B149.2 Propane Installation Code (Latest Edition).

GAS METER SIZE – NATURAL GASES ONLY

Be sure that the gas meter has sufficient capacity to supply the full rated gas input of the water heater as well as the requirements of all other gas fired equipment supplied by the meter. If the gas meter is too small, ask the gas company to install a larger meter having adequate capacity.

GAS PRESSURE REGULATION

Main line gas pressure to the water heater should be between a maximum 14 inch *(3483.8 Pa)* W.C. and a minimum supply pressure as shown on the rating plate. The inlet gas pressure must not exceed the maximum value. In some installations, a regulator sized for the input rating of the water heater will need to be installed just ahead of the inlet gas connection to the water heater to reduce excess gas pressure or surges in gas pressure.

BEFORE PLACING THE WATER HEATER IN OPERATION, CHECK FOR GAS LEAKAGE. USE SOAP AND WATER SOLUTION OR OTHER MATERIAL ACCEPTABLE FOR THE PURPOSE OF LOCATING GAS LEAKS**.**

⚠ WARNING

DO NOT USE MATCHES, CANDLES, FLAME OR OTHER SOURCES OF IGNITION FOR THIS PURPOSE.

⚠ WARNING

Turn off or disconnect the electrical power supply to the water heater before servicing. Label all wires prior to disconnection when servicing controls. Wiring errors can cause improper and dangerous operation. Verify proper operation after servicing.

All electrical wiring must be installed and grounded in accordance with local codes, or in the absence of local codes, the National Electrical Code, ANSI/NFPA 70 and/or CSA C22.2 Electrical Code.

The water heater must be wired to a 120 VAC, 60 Hz, 15A power supply. The water heater **must be** connected to a GFI outlet and wired on a separate circuit and breaker. If a flexible line cord and plug is permitted by local code, then provide a three wire GFI grounding type receptacle within reach of the line cord provided on the control box. Do not plug the line cord into a receptacle that can have the power supply interrupted by a switch that is used to control lights or another appliance.

If wiring in conduit is required, remove the line cord and strain relief bushing in the control panel and install an electrical conduit connector. Connect the hot, neutral, and ground leads to the terminal block using quick connect terminals. Refer to the wiring diagram for the correct terminal locations for each wire lead.

⚠ CAUTION

This water heater **must** be wired on a separate circuit. Failure to wire on a separate circuit may cause improper operation or failure of the electrical components of the water heater. A GFI outlet or breaker is required. Refer to the "Electrical Connections" section of the Installation and Operating Instructions Manual for complete instructions on electrical wiring and connections to the water heater.

Do not energize the electric circuit before the water heater tank is filled with water.

This controller is Polarity sensitive. If the Hot and Neutral Supply voltage is reversed, the controller will not sense flame and the water heater will not operate. Verify polarity before connecting the water heater.

Figure 25. Wiring Diagram and Schematic

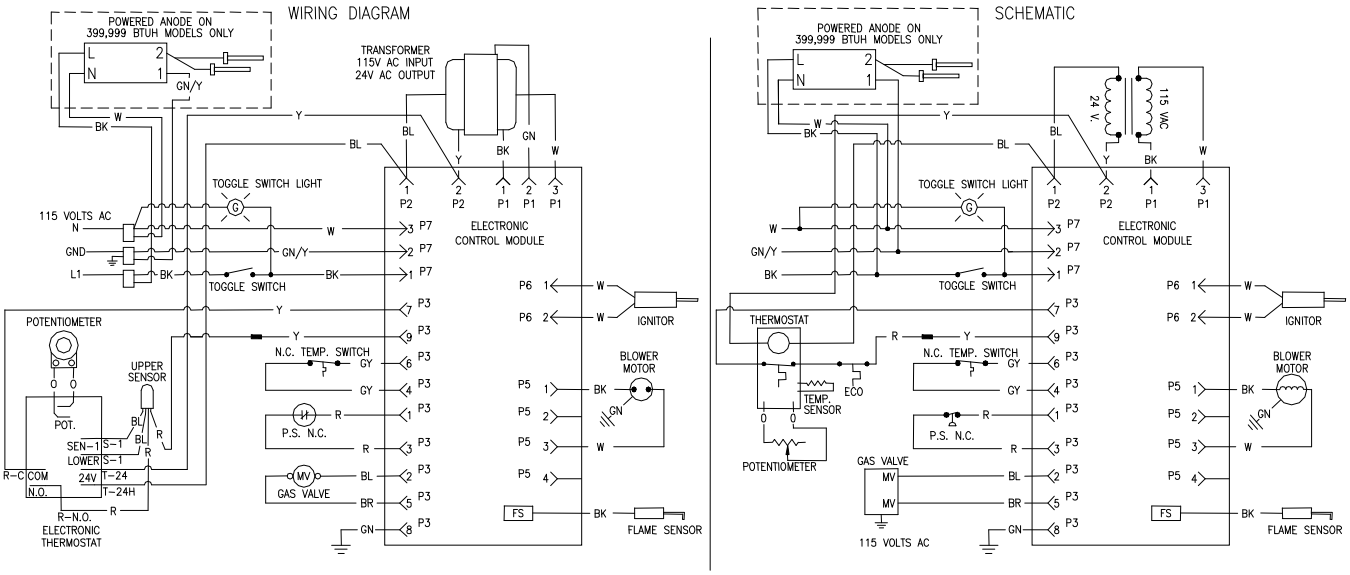

SECTION IX: OPERATING INSTRUCTIONS

⚠ WARNING

Water heaters are heat-producing appliances. To avoid damage or injury there must be no materials stored against the water heater or direct vent system, and proper care must be taken to avoid unnecessary contact (especially by children) with the water heater and direct vent system. UNDER NO CIRCUMSTANCES SHOULD FLAMMABLE MATERIALS, SUCH AS GASOLINE OR PAINT THINNER BE USED OR STORED IN THE VICINITY OF THIS WATER HEATER OR IN ANY LOCATION FROM WHICH FUMES COULD REACH THE WATER HEATER.

Installation or service of this water heater requires ability equivalent to that of a licensed tradesman in the field involved. Plumbing, air supply, venting, gas supply and electrical work are required.

Light the unit in accordance with the operating instructions label attached to the water heater.

Under no circumstances should the input rate exceed the input rate shown on the water heater rating plate. Over firing could result in damage or sooting of the water heater.

If the unit is exposed to the following, do not operate water heater until all corrective steps have been made by a factory authorized independent service contractor or qualified service professional.

1. Flooding to or above the level of the burner or controls
2. External firing
3. Damage
4. Firing without water
5. Sooting

NEVER OPERATE THE WATER HEATER WITHOUT FIRST BEING CERTAIN IT IS FILLED WITH WATER AND A TEMPERATURE AND PRESSURE RELIEF VALVE IS INSTALLED IN THE RELIEF VALVE OPENING OF THE WATER HEATER.

GENERAL INSTRUCTIONS

TO FILL THE WATER HEATER

1. Close the water heater drain valve by turning the knob or valve stem clockwise. If alternative water connections are provided but not used, make certain they are plugged (i.e. rear connections).
2. Open the cold water supply shut-off valve.
3. Open several hot water faucets to allow air to escape from the system.
4. When a steady stream of water flows from the faucets, the water heater is filled. Close the faucets and check for water leaks at the water heater drain valve, combination temperature and pressure relief valve and the hot and cold water connections.

SEQUENCE OF OPERATION

1. A call for heat from thermostat
2. Blower ON
3. Blower pre-purge
4. Igniter warm-up
5. Main burner ON
6. Flame signal confirmed
7. Thermostat satisfied
8. Main burner OFF
9. Blower post-purge

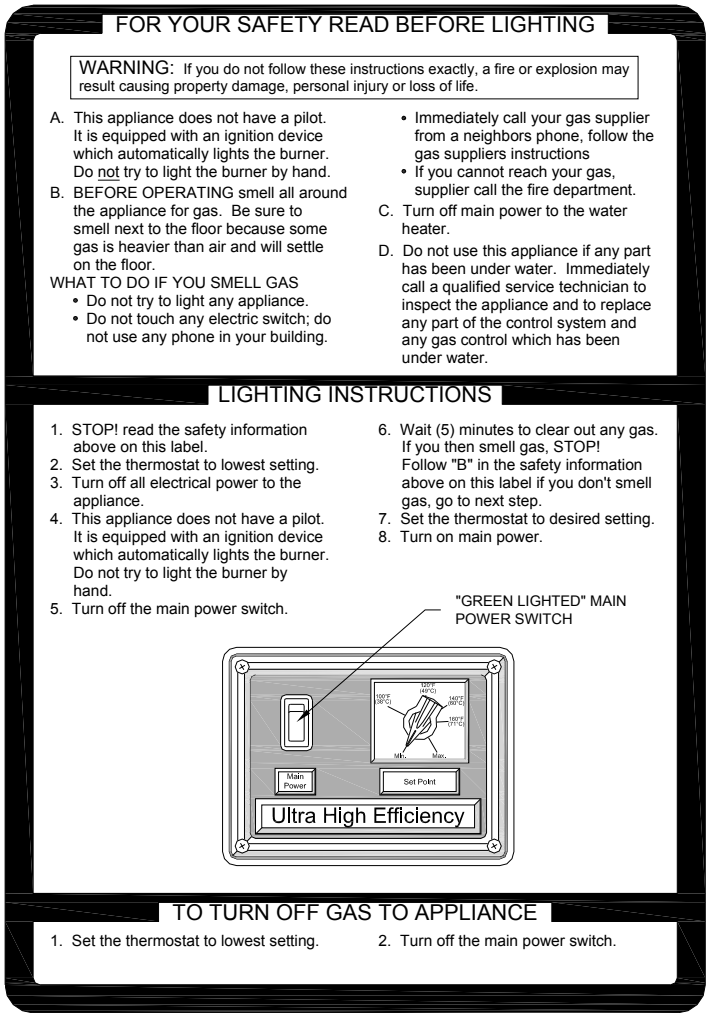

FOR YOUR SAFETY READ BEFORE LIGHTING

WARNING: If you do not follow these instructions exactly, a fire or explosion may result causing property damage, personal injury or loss of life.

A. This appliance does not have a pilot. It is equipped with an ignition device which automatically lights the burner. Do not try to light the burner by hand.
B. BEFORE OPERATING smell all around the appliance for gas. Be sure to smell next to the floor because some gas is heavier than air and will settle on the floor.

WHAT TO DO IF YOU SMELL GAS
- Do not try to light any appliance.
- Do not touch any electric switch; do not use any phone in your building.
- Immediately call your gas supplier from a neighbors phone, follow the gas suppliers instructions
- If you cannot reach your gas, supplier call the fire department.

C. Turn off main power to the water heater.
D. Do not use this appliance if any part has been under water. Immediately call a qualified service technician to inspect the appliance and to replace any part of the control system and any gas control which has been under water.

LIGHTING INSTRUCTIONS

1. STOP! read the safety information above on this label.
2. Set the thermostat to lowest setting.
3. Turn off all electrical power to the appliance.
4. This appliance does not have a pilot. It is equipped with an ignition device which automatically lights the burner. Do not try to light the burner by hand.
5. Turn off the main power switch.
6. Wait (5) minutes to clear out any gas. If you then smell gas, STOP! Follow "B" in the safety information above on this label if you don't smell gas, go to next step.
7. Set the thermostat to desired setting.
8. Turn on main power.

TO TURN OFF GAS TO APPLIANCE

1. Set the thermostat to lowest setting.
2. Turn off the main power switch.

Figure 26.

Lighting Instruction Label

TEMPERATURE ADJUSTMENT

The temperature selector knob of the thermostat has been adjusted to 120°F *(48.9°C)* when shipped from the factory.

NOTICE

The lower the temperature setting, the greater the energy efficiency, both to heat the water and to maintain the storage temperature during standby periods. Lower water temperatures also extend tank life. Remember, no water heating system will provide exact temperatures at all times. Allow a few days of operation at this setting to determine the correct temperature setting consistent with the requirements for the installation.

⚠ CAUTION

This water heater, when set at a lower temperature setting is not capable of producing hot water of sufficient temperature for sanitizing purposes.

During the winter season or any cold period, you may desire a higher temperature setting to adjust for the colder incoming water. This adjustment, however, may cause additional condensation to form on the colder tank surface. This does not mean the tank is leaking. During summer months, the warmer incoming water temperatures will benefit the performance of your water heater and reduce the amount of condensation developed.

Condensation does not mean your tank is leaking. Most of reported tank leaks on installation are proven to be condensation. To avoid unnecessary inconvenience and expense, make sure the tank is leaking before calling an independent servicing contractor or qualified service professional.

⚠ DANGER

Hotter water increases the risk of scald injury. Scalding may occur within 5 seconds at a temperature setting of 140°F *(60°C)*. To protect against hot water injury, install an ASSE approved mixing valve in the water system. This valve will reduce point of discharge temperature by mixing cold and hot water in branch water lines. A licensed plumbing professional or local plumbing authority should be consulted.

This water heater is equipped with an energy cut out device to prevent overheating. Should overheating occur or the gas supply fails to shut off, turn off the manual gas control valve to the appliance and call a qualified service agency.

If the water heater is to remain idle for 30 days or more or is subjected to freezing temperatures while shut off, the water heater and piping should be fully drained and the drain valve should be left fully open. Refer to the "General Operation" section of this Installation and Operating Instructions Manual for the procedure on draining the water heater.

BURNER FLAME CHECK

At the time of installation and at monthly intervals, a visual check of the burner flames should be made to determine if they are burning properly. The main burner may be seen through the sight glass window on the front of the combustion insert mounting bracket (Figure 27). The burner flames should be a blue flame near the burner surface in a uniform flame pattern. Occasional yellow or white streaks are normal.

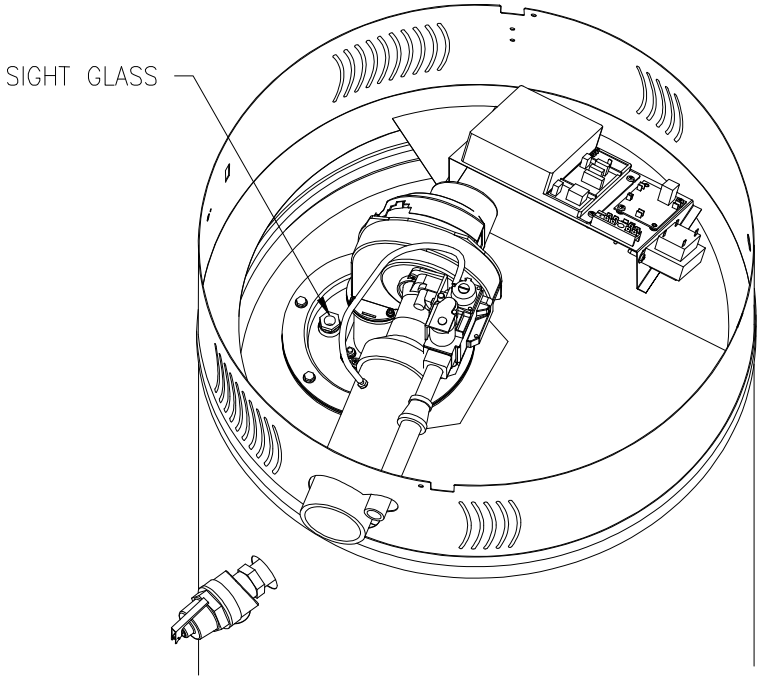

Figure 27. Sight Glass Location

⚠ WARNING

Do not run out of propane gas. Damage to the water heater may occur.

SECTION X: MAINTENANCE

⚠ DANGER

DO NOT ATTEMPT TO REPAIR GAS VALVE.
DO NOT ATTEMPT TO REPAIR IGNITION MODULE.
DO NOT ATTEMPT TO REPAIR VENTURI.
DO NOT ATTEMPT TO REPAIR THERMOSTAT BOARD.
DO NOT ATTEMPT TO REPAIR TRANSFORMER.
DO NOT ATTEMPT TO REPAIR PRESSURE SWITCH.

GENERAL

KEEP APPLIANCE AREA CLEAR AND FREE FROM COMBUSTIBLE MATERIALS, GASOLINE AND OTHER FLAMMABLE VAPORS AND LIQUIDS.

Water heater maintenance includes periodic tank flushing and cleaning, and removal of lime scale. The unit should be inspected and adjusted to maintain proper combustion. Refer to Table 5, "Suggested Maintenance Schedule". A periodic inspection of the venting system should be made.

MAINTENANCE SCHEDULE

Following are the instructions for performing some of the recommended maintenance. Unit inspection and adjustment should be performed by a competent technician.

Suggested Maintenance Schedule

COMPONENT	OPERATION	INTERVAL	REQUIRED
Tank	Sediment Removal	Monthly	Flushing
Anode Rods	Inspect	Semi-Annually	Replace as Required
Relief Valve	Check Operation	Semi-Annually	Proper Operation
Blower	Clean Inlet Screen	As Required	Soft Brush
Vent & Air Intake System	Inspect	Every 3 Months	Joints should be sealed
Ignition System	Inspect	Annually	Clean of dust and dirt
Vent Terminal	Free of Shrubs & Debris	Monthly	Remove object that caused restriction
Combustion System	Inspect	Monthly	Confirm S-OP
Condensate Line	Inspect	Monthly	Remove restriction

Table 5.

FLUSHING WATER HEATER

1. Turn OFF the water heater electrical disconnect switch.
2. Open the drain valve and allow water to flow until it runs clean.
3. Close the drain valve when finished flushing.
4. Turn ON the water heater electrical disconnect switch.

DRAINING WATER HEATER

The water heater must be drained if it is to be shut down and exposed to freezing temperatures. Maintenance and service procedures may also require draining the water heater.

1. Turn off the water heater electrical disconnect switch.
2. Connect a hose to the drain valve.
3. Locate hose's discharge in an area where hot water will not cause any damage or injury.
4. Close the cold water inlet valve to water heater.
5. Open a nearby hot water faucet to vent the system.
6. Open the heater drain valve.
7. If the water heater is being drained for an extended shutdown, it is suggested the drain valve be left open during this period.

FILLING WATER HEATER

1. Close the water heater drain valve by turning the knob or valve stem clockwise. If alternative water connections are provided but not used, make certain they are plugged (i.e. rear connections).
2. Open the cold water supply shut-off valve.
3. Open several hot water faucets to allow air to escape from the system.
4. When a steady stream of water flows from the faucets, the water heater is filled. Close the faucets and check for water leaks at the water heater drain valve, combination temperature and pressure relief valve and the hot and cold water connections.

SEDIMENT AND LIME SCALE REMOVAL

Waterborne impurities consist of the particles of soil and sand, which settle out and form a layer of sediment on the bottom of the tank.

The amount of calcium carbonate (lime) released from water is in direct proportion to water temperature and usage. The higher the water temperature or water usage, the more lime deposits are dropped out of the water. This is the lime scale, which forms in pipes, water heaters and on cooking utensils.

Lime accumulation not only reduces the life of the equipment but also reduces efficiency of the water heater and increases fuel consumption.

The usage of water softening equipment greatly reduces the hardness of the water. However, this equipment does not always remove all of the hardness (lime). For this reason it is recommended that a regular schedule of deliming be maintained.

The depth of the buildup should be measured periodically. Water heaters will have about 3 inches *(7.6 cm)* of lime buildup when the level of lime has reached the bottom of the cleanout opening or about 1 inch *(2.5 cm)* of lime buildup if it has reached the drain valve opening. A schedule for deliming should be set up, based on the amount of time it would take for a ½ inch *(1.3 cm)* buildup of lime.

Example 1: Initial inspection shows ½ inch *(1.3 cm)* of lime accumulation. Therefore, the water heater can be delimed once a year.

To remove sediment and lime scale:

1. Drain the heater. Refer to DRAINING THE WATER instructions in this section.
2. Remove outer cover plate from lower side of water heater jacket.
3. Remove cover and gasket from cleanout opening.
4. Remove lime, scale or sediment using care not to damage the glass-lining.
5. Inspect cleanout plate gasket: Replace gasket if necessary (Contact local distributor for correct part number).
6. Install gasket and cleanout plate. Be sure to draw plate up tight by tightening screws securely.
7. Close the drain valve. Open a hot water fixture to allow air to escape. Open the cold water supply to water heater and allow the tank to fill. Follow the lighting instructions.
8. Check for water leakage.
9. Install outer jacket cover plate.

ANODE INSPECTION AND REPLACEMENT

This water heater is equipped with multiple sacrificial anodes. Anodes protect the glass-lined tank from corrosion by sacrificing themselves through electrolysis. When the anode material is consumed, there is no more protection and corrosion of the tank accelerates.

Inspection of the anode every 6 months allows you to identify the rate of anode degradation. The anode should be replaced when its diameter is ⅜ inch *(1 cm)*, or annually whichever is first. Aggressive, very hot and softened water causes rapid consumption of the anode requiring frequent inspections. The replacement anodes rods are available from your local distributor.

To inspect or replace an anode:

The anodes on this water heater are easily accessible from the top of the water heater making replacement simple and quick. Use the following procedure to remove and inspect the anodes.

1. Drain the heater. Refer to DRAINING THE WATER HEATER instructions in this section.
2. Flush the heater. Refer to FLUSHING THE WATER HEATER instructions in this section.
3. Remove the combustion surround top by unlatching.
4. Remove the second pass access cover. (If equipped)
5. Remove the second pass insulation.
6. Remove the second pass collector cover.
7. Remove the anode using a socket of the appropriate size. Sometimes a breaker bar will need to be used. Do not use an impact wrench.
8. Inspect and replace the anode as required. Use pipe tape or sealant when reinstalling the anode.
9. Close the drain valve. Open a hot water fixture to allow air to escape. Open the cold water supply to water heater and allow the tank to fill.
10. Check your anode and drain valve for leaks.
11. Replace second pass collector cover. Make sure to clean off any sealant and reseal before fastening.
12. Replace second pass insulation.
13. Replace second pass access cover.
14. Replace combustion surround top and latch it securely in place.
15. Follow the lighting instructions.

POWERED ANODE SYSTEM FOR 100 GALLON 399,999 BTU/HR. *(117.2 kw)* INPUT MODELS:

Models with input ratings of 399,999 Btu/hr. *(117.2 kw)* are equipped with a powered anode system. The powered anode system provides corrosion protection to the tank by supplying a low voltage current to the titanium anode rods and then periodically comparing this current with the potential between the anode rod and tank wall to make corrections. The powered anode system is designed to extend the tank life without requiring anode rod replacement. The powered anode system consists of two titanium powered anode rods (31 ⅞ inches *(81 cm)* long), located in the front top of the water heater tank, and the powered anode control module located on the right side of the control panel. In addition, there is one additional magnesium anode rod (non-powered) located under the top flue collector for additional back-up protection.

The powered anode rod must have the electrical power supply connected at all times in order to provide corrosion protection to the water heater tank. If the electrical supply to the water heater is to be off for an extended period of time, the water heater must be drained. Turning off the lighted switch on the front panel to shut off the water heater will not turn off the powered anode system, as long as the line cord is plugged in and the breaker is left on.

The powered anode control module is located on the right vertical side of the control panel inside the surround panel. The control has a LED indicator light to show the status of operation. When the tank is filled with water and the power supply is on to the water heater, the light should have a steady green glow to indicate that protection current is flowing and operating normally. If the indicator light is not glowing, the power supply to the water heater or powered anode system is disconnected. Check the power supply or wire connections to the powered anode control.

If the control is flashing red, then there is a malfunction with the powered anode system. Make sure there are no bare spots in the wire insulation to the powered anode rods. Check all electrical connections. The powered anode rods are insulated from the water heater tank in the bushing. With an ohmmeter, check continuity between the powered anode terminal and the bushing. There should not be continuity. If there is continuity, replace the powered anode assembly.

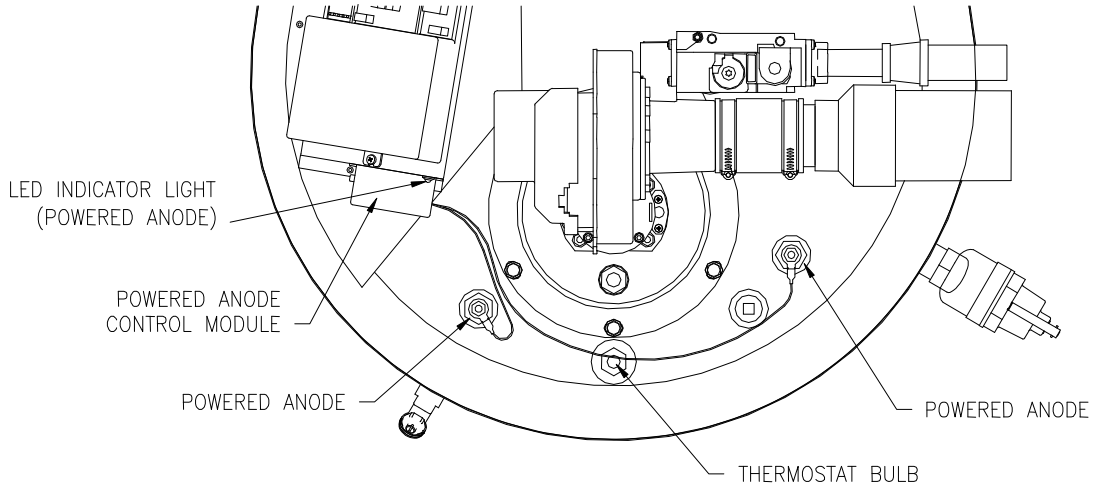

Figure 28. Powered Anode locations

DRAIN VALVE AND TANK ACCESS PANEL

The water heaters are equipped with a ¾ inch *(1.9 cm)* drain valve.
An access panel covers the cleanout opening in the tank, which is sealed by a gasket and cover. **RELIEF VALVE**

At least twice a year, the temperature and pressure relief valve should be checked to ensure that it is in operating condition. To check the relief valve, lift the lever at the end of the valve several times. The valve should seat properly and operate freely.

If water does not flow, remove and inspect for obstructions or corrosion. Replace with a new valve of the recommended size as necessary. A thorough inspection of the valve should be performed at least every three years by removing the temperature and relief valve from the tank. Do not attempt to repair the valve, as this could result in improper operation and a tank explosion. In areas with poor water conditions, it may be necessary to inspect the T&P valve more often than the recommended maintenance schedule

⚠ CAUTION

Before manually operating the valve, make sure that a drain line has been attached to the valve to direct the discharge to an open drain. Failure to take this precaution could mean contact with extremely hot water passing out the valve during this checking operation.

If the temperature and pressure relief valve on the water heater discharges periodically or continuously, it may be due to thermal expansion of water in a closed water supply system, or, it may be due to a faulty relief valve.

Thermal expansion is the normal response of water when it is heated. In a closed system, thermal expansion will cause the system pressure to build until the relief valve actuation pressure is equaled. Then, the relief valve will open, allowing some water to escape, slightly lowering the pressure.

Contact your water supplier or local plumbing inspector on how to control this situation.

⚠ WARNING

Above all, do not plug the temperature and pressure relief valve. This is not a solution and can create a hazardous situation.

VENT AND AIR INTAKE SYSTEM
Examine the vent and air intake system every 3 months. Points of inspection are as follows:
1. Check for obstructions and/or deterioration of vent piping and vent terminal. Replace immediately where needed.
2. Vent pipe and vent terminal screen should be cleaned of any foreign material. The screen is located inside the vent terminal outlet and is accessible from the outside of the vent terminal elbow. Do not reach inside the vent terminal when the water heater is in operation.
3. Check all venting system connections for leakage and reseal as required.

COMBUSTION SYSTEM INSPECTION

Inspect the operation of the combustion system monthly. Use the following procedure to inspect the combustion system.

1. Turn off the main power switch of the water heater.
2. Adjust the thermostat to the Min. setting.
3. Remove the top of the combustion surround by unlatching it.
4. While observing the ignition module, turn on the main power switch.
5. Adjust thermostat to the Max. setting.
6. Watch the LED's light as the controller goes through the S-OP as previously described.
7. Upon ignition, observe the main burner flame.
8. Readjust thermostat to previous setting.
9. Replace combustion surround top and latch it securely in place.

⚠ WARNING

Do not run out of propane gas. Damage to the water heater may occur.

SECTION XI: TROUBLE SHOOTING GUIDE

Main power light is not lit.	• Make sure that water heater is plugged in. • When the switch is on, is there 120VAC between L1 and N on the terminal block? If not, then check for loose wire connections on the "Power Switch Wire Harness." If connections are ok, then replace the switch. • If there is voltage between L1 and N then the light on the switch is burnt out. Replace switch
Ignition module "Power" LED is not lit	• Check for 120 VAC at the ignition module on "120 VAC IN." If there is voltage, then check the secondary (24 volt terminals) voltage across the transformer as previously described. If no voltage from the secondary plug from the transformer, replace the transformer or wire harness. If the control has 120 and 24 volt input, replace the control.
Blower does not energize	• Unplug the wire harness to the blower and check the pins for 120 volts. If no voltage, and the ignition control has 120 volts, the control may be defective, call tech support. If 120 volts is present to the blower, make sure the pins are making good contact. Replace blower if connections are good and 120 volts is present to blower.
Ignitor does not glow	• Make sure pressure switch contacts are closed (24 volts from pressure switch harness to ground). Is there voltage to the "Hot Surface Ignitor"? Check for 120VAC to the ignitor from the ignition module when the ignition LED is lit. If no voltage to the ignitor, replace ignition control. • Check the resistance value across the "Hot Surface Ignitor?" If over 120 ohms, then replace hot surface ignitor.
Main valve does not turn on	• Put your hand on the gas valve. When the "Valve" LED lights on the ignition module, can you feel it energize? If not, then check the voltages at the ignition module across pins 2 (blue) and 5 (brown) on the plug "CONTROL". If there is 24 VAC across these pins, then check to see if the "Rectifier Harness" (or gas valve harness on 100 gallon 399,999 BTU/hr *(117.2 kw)* model) is secure. If it is secure, then replace the "Gas Valve". • If you can feel the gas valve energize, check to make sure the main gas supply is not in the off position.
Burner Flame keeps going out	• Is there minimum gas supplied to water heater as stated on the rating plate? If not, then increase the supply pressure to the water heater (4.5 min. - 14 max.). • Measure the microAmps through the flame sensor using a multimeter. Is there at least 4 microAmps? If not, then replace the "Flame Sensor" or flame sensor wire.
Thermostat does not call for heat	• Make sure that the temperature of the tank is cool. • If the thermostat does not call for heat, then check the PRIMARY voltage across the "Transformer". If there is voltage across the PRIMARY, then check the voltage across the SECONDARY leads of the "Transformer". • Install a jumper wire from N.O. terminal to the COM terminal on the "Thermostat PC Board." If the thermostat calls for heat after installing a jumper wire then check the "Thermostat Sensor Probe" leads for proper resistance with an OHM meter (See appendix A). • If sensor reading is not correct, replace "Thermostat Sensor Probe." • If the sensor readings are correct, then check "Potentiometer" for the proper resistance. If the readings are correct, then replace the "Thermostat PC Board"; If readings are not correct replace the "Potentiometer."

Manufactured under one or more of the following U.S. Patents: 5,277,171; 5,341,770; 5,372,185; 5,485,879; 5,574,822; 5,596,952; 5,660,165; 5,682,666; 5,761,379; 5,943,984; 5,954,492; 5,988,117; 6,056,542; 6,142,216; 6,442,178; 6,684,821; 6,935,280; 7,063,132; 7,063,133; 7,007,748; 7,270,087; 7,334,419; 7,337,517; 7,409,925; 7,458,341; 7,559,293; 7,621,238; 7,634,976; 7,650,859; 7,665,210; 7,665,211; 7,699,026; 7,866,168; 7,900,589; 7,971,560; 7,992,526 8,082,888; 8,146,772; Other U.S. and Foreign patent applications pending. Current Canadian Patents: 2,092,105; 2,107,012; 2,108,186; 2,112,515; 2,143,031; 2,239,007; 2,262,174; 2,314,845; 2,409,271; 2,476,685; 2,504,824; 2,548,958

SECTION XII: PARTS LIST

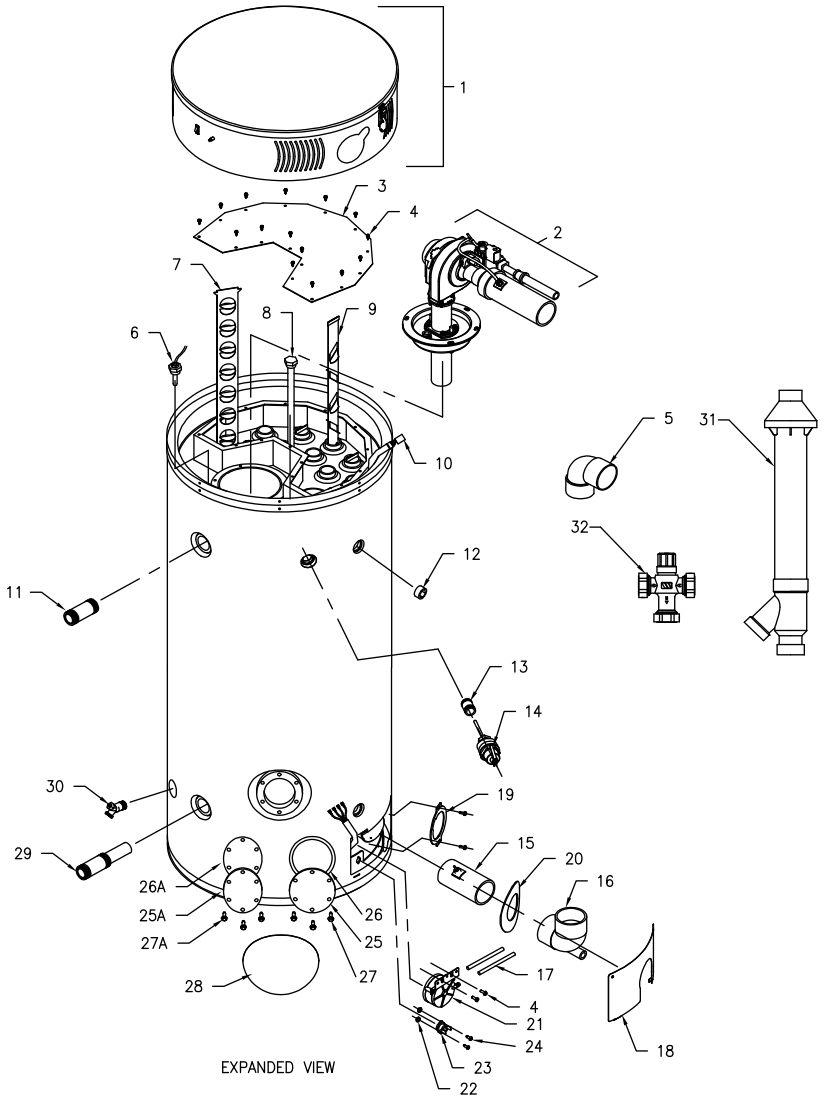

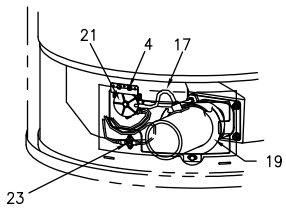

EXHAUST SERVICE AREA DETAIL
(ASSEMBLED)

Ultra High Efficiency Water Heater

1	Combustion Surround Ass'y
2	Burner Ass'y (Specify Model)
3	2nd Pass Top Collector Cover
4	Screw 10-16 x 3/4
5	Vent Termination Elbow
6	Thermostat Sensor Probe
7	Baffle 4” Flue (Specify Model)
8a	Mag. Rod Ass'y
8b	Powered anode (for 399)
9	Baffle 2” Flue
10	Wire Harness-Service Panel
11	Plastisert Nipple 1 ½” NPT
12	Plug
13	Nipple
14	T&P Relief Valve
15	Exhaust Pipe (PVC) w/ Barb Tap
16	Condensate Trap Elbow
17	Silicone hose
18	Outer Door Service Panel (Specify Model)
19	Vent Pipe Support Bracket (except 399)
20	NSF Escutcheon
21	Exhaust Pressure Switch
22	Nuts
23	Collector Limit Switch
24	Screw 6-32 x 3/8
25	Cleanout Access Cover
26	Cleanout Gasket
27	Screw 5/16 - 18 x 3/4 HH Grade 5
28	Cleanout Cover
29	Cold Water Inlet (Hydrojet) Ass'y
30	No Handle Brass Drain Valve
31	Concentric Vent System (Optional)
32	Thermostatic Mixing Valve (Optional)

Customer must specify complete model number and serial number when ordering service parts.

1 Combustion Surround Ass'y

AA	Keeper Latch & Catch
BB	Screw 8-32 x 1/2 RHCR
CC	Ignition Control Ass'y
DD	Jacket Head 28 1/4" Grey
EE	Switch Main Power
FF	Potentiometer
GG	Combustion Surround
JJ	Surround Bas/Jacket Head

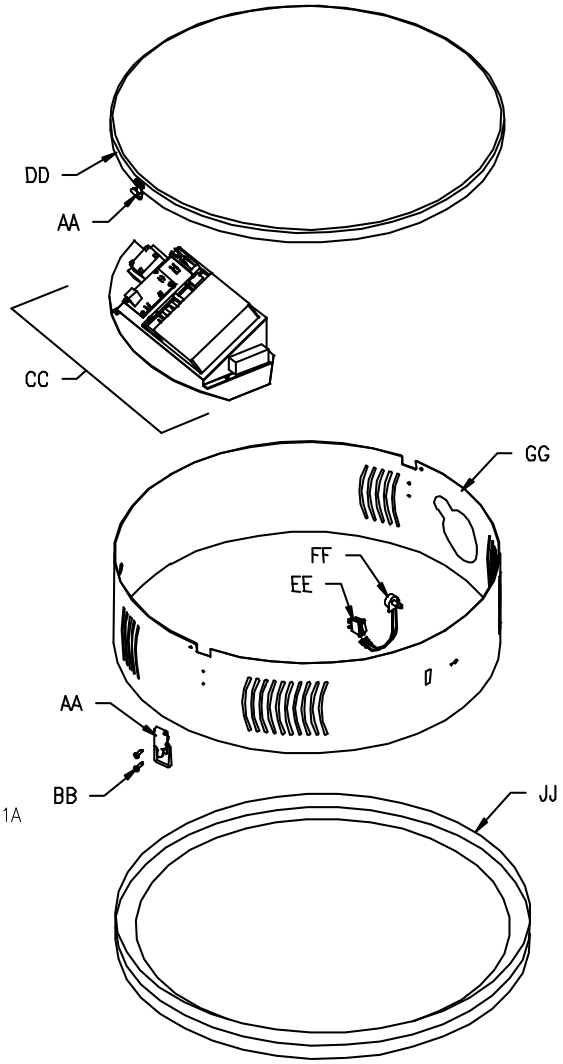

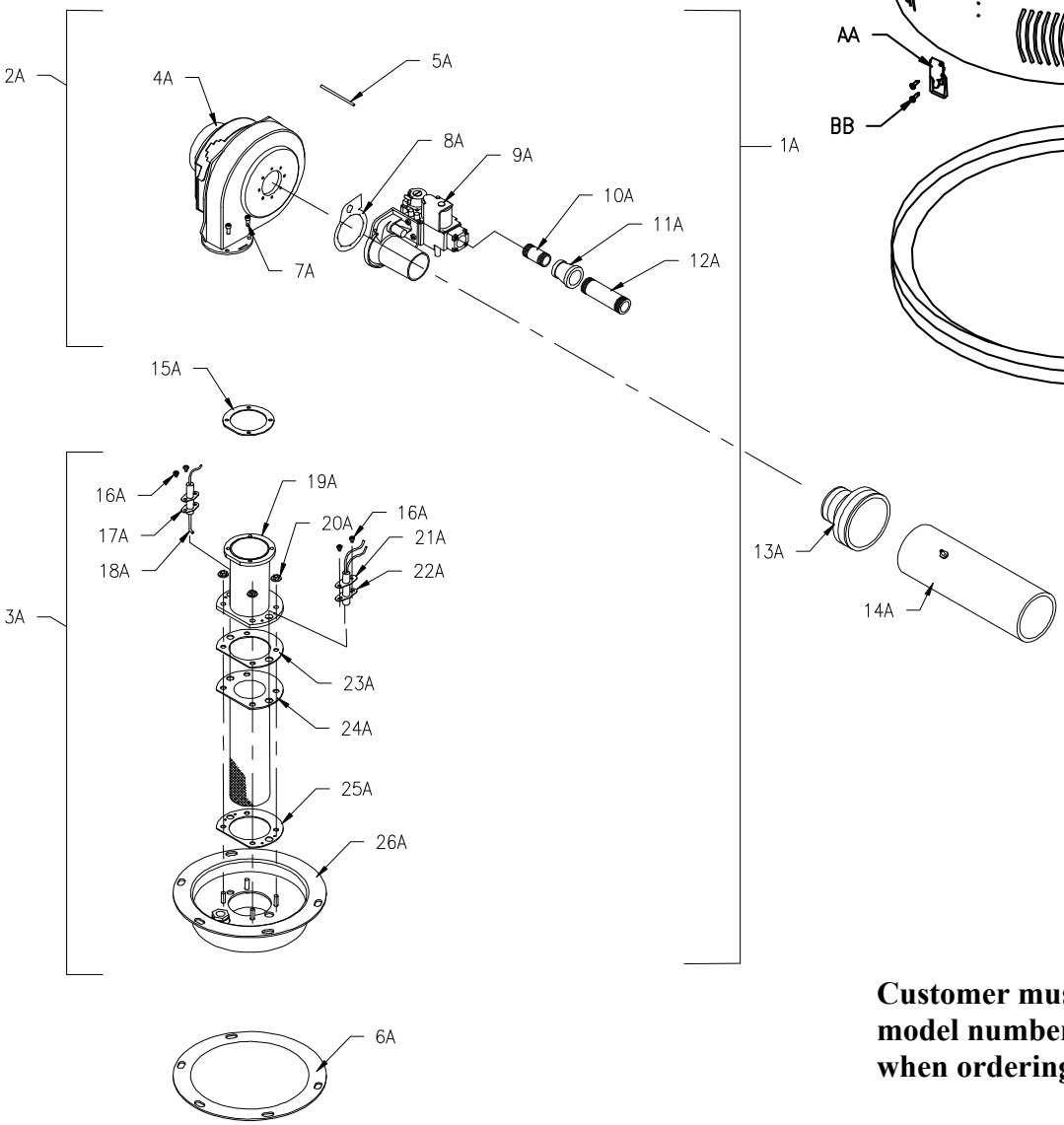

Customer must specify complete model number and serial number when ordering service parts.

2 Combustion Ass'y (pictured previous page)

1A	Combustion Ass'y (Specify Model)	15A	Gasket Blower Transition (Specify Model)
2A	Blower/Gas Valve Ass'y (Specify Model)	16A	Screw 8 -32 x 1/4 RHCR
3A	Burner Ass'y	17A	Gasket Flame Sensor
4A	Blower – EBM	18A	Flame Sensor
5A	Silicone Hose	19A	Transition Tube
6A	Burner Mounting Insert Gasket	20A	Nut Hex Washer
7A	Screw 10-32 x 3/4 SHCS	21A	Gasket Hot Surface Ignitor
8A	Gasket & Screw	22A	Hot Surface Ignitor
9A	Gas Valve (Specify Model)	23A	Burner Mounting Gasket
10A	Nipple 1/2 NPT x 3"	24A	Burner 21 Port
11A	Reducer 3/4 x 1/2 NPT (or ¾" x 1" for 399)	25A	Burner Mounting Gasket
12A	Nipple 3/4 NPT x 6" (or 1" NPT for 399)	26A	Burner Mounting Insert
13A	2" dia. Flex Reducer (or PVC reducer for 399)		
14A	Inlet (PVC)		

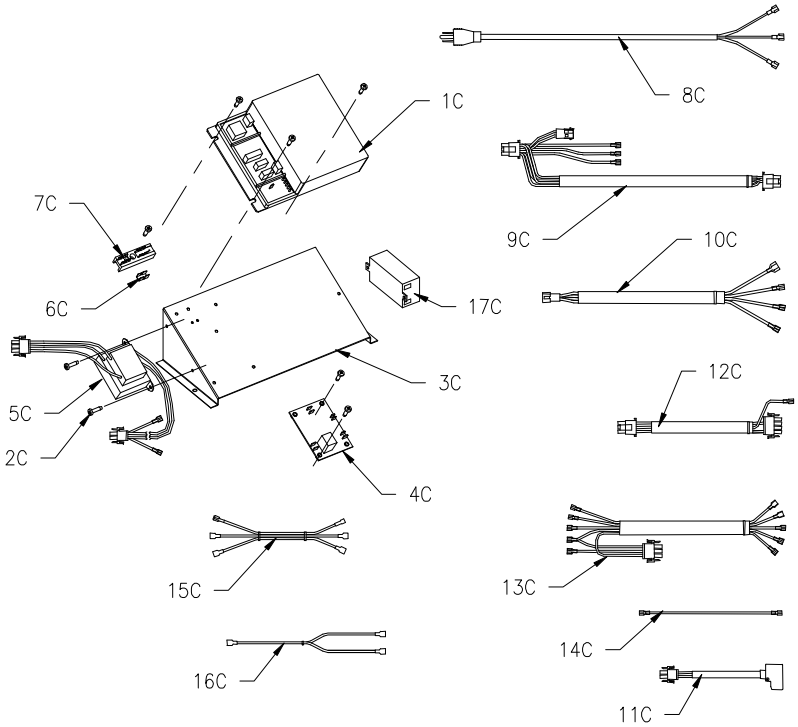

CC	Ignition Control Ass'y		
1C	Electronics Control Module	10C	Thermostat Wire Harness
2C	Screw #8-32 x 1/2	11C	Rectifier Harness (Specify Model)
3C	Control Mounting Panel	12C	Blower Wire Harness (Specify Model)
4C	Thermostat PC Board	13C	Power Switch Wire Harness
5C	Transformer – 120/24 VAC	14C	Flame Sensor Wire Harness
6C	Terminal	15C	Powered Anode Control Harness (399 only)
7C	Terminal Strip	16C	Powered Anode Harness (399 only)
8C	Power Cord	17C	Powered Anode Control (399 only)
9C	Controller Wire Harness		

Customer must specify complete model number and serial number when ordering service parts.

NOTES:

NOTES: